ELECTRIC SUPPLY Co
WHOLESALE — DISTRIBUTORS OF INDUSTRIAL AND PROCESS CONTROL
Albany • (503) 926-6617 • FAX (503) 926-6151
Eugene • (503) 484-6333 • FAX (503) 484-4124
Salem • (503) 371-0017 • FAX (503) 371-3738

ALLEN-BRADLEY
A ROCKWELL INTERNATIONAL COMPANY

Application and Product Guide

Smart Motor Controllers
(Bulletin 150)

Price: $50.00

Publication 150-909 – January, 1992
Supersedes Publication 150-909 Dated May, 1990
and Publication 150-910 Dated April, 1989

Start Smart

GET THE COMPETITIVE EDGE

ALLEN-BRADLEY **SMART MOTOR CONTROLLERS**

SPECIAL PROGRAM INCENTIVE

15% OFF

On your next order for a Smart Motor Controller

Thank you for participating in Allen-Bradley's seminar/presentation of Smart Motor Controllers. We want to show our appreciation by offering you a special 15% discount on the purchase of your next controller. Simply fill out the coupon below and redeem it at your local Allen-Bradley distributor.

Select any product from our range: SMC PLUS™, SMC-2™, or STC™. Use this special discount to prove to yourself that Allen-Bradley Smart Motor Controllers will save you time and money, and give you the performance you expect.

Restrictions: One coupon per customer-location.
Quantity - One controller per coupon on Catalog Numbered product from the SMC™ family.
Order must be processed by **August 31, 1992.**
Cannot be used in conjunction with other special programs or discounts.

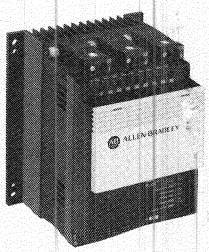

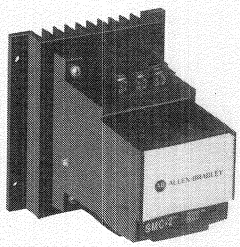

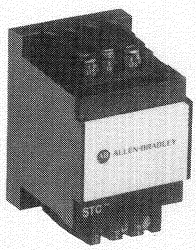

☐ YES, I want to take advantage of Allen-Bradley's special offer for 15% off the normal purchase price of a SMC™ Controller.

COMPANY NAME _____

LOCAL ADDRESS _____

_____

INDIVIDUAL NAME _____

PHONE # _____

P.O. # _____

DATE _____

CATALOG NUMBER _____
(Quantity One)

P 04878

Table of Contents

Chapter	Title	Page
1	**STC Starting Torque Controller**	
	Description	1-1
	Modes of Operation	1-2
	Across the Line Response	1-2
	STC Controller Response	1-2
	Line Response Versus STC Controller Response	1-2
	Features	1-3
	Adjustments	1-3
	Wiring Diagrams	1-4
	Applications	1-5
	Suitable Replacement	1-5
	Chain Conveyor with Torque Control	1-6
	Crane with Torque Control	1-7
	Aircraft Hangar Door	1-8
2	**SMC-2 Controller**	
	Description	2-1
	Modes of Operation	2-1
	Soft Start	2-2
	Current Limit Start	2-2
	Full Voltage Start	2-2
	Features	2-3
	Adjustments	2-4
	Series Controller	2-5
	Options	2-6
	Description of Interface Option	2-6
	Soft Stop Option	2-6
	Wiring with Interface Option	2-7
	Overload Relay Option	2-8
	Applications	2-8
	Conveyor with Soft Start	2-9
	Tumbler with Soft Start	2-10
	Power Walk with Soft Start and Soft Stop Option	2-11
	Towline Conveyor with Soft Start and Soft Stop Option	2-12
	Bottle Filler with Soft Start and Soft Stop Option	2-13
	Grinder with Soft Start	2-14

Chapter	Title	Page
3	**SMC PLUS Smart Motor Controller**	
	Description	3-1
	Modes of Operation	3-2
	Soft Start with Kickstart	3-2
	Current Limit Start	3-2
	Full Voltage Start	3-3
	Features	3-3
	LEDs	3-3
	Auxiliary Contacts	3-3
	Modular Design	3-4
	Adjustments	3-5
	Typical Connection	3-6
	Typical Connection for Retrofit Applications	3-7
	Options	3-8
	Soft Stop Option	3-8
	Soft Start Selection with Soft Stop Option	3-9
	Pump Control Option	3-10
	Pump Control with Starting and Stopping Option	3-11
	Preset Slow Speed Option	3-12
	Soft Start Selection with Preset Slow-Speed Option	3-13
	SMB Smart Motor Braking Option	3-14
	Soft Start Selection with SMB Braking Option	3-15
	Accu-Stop Option	3-16
	Soft Start Selection with Accu-Stop Option	3-17
	Slow Speed with Braking Option	3-18
	Soft Start Selection with Slow Speed and Braking Option	3-19
	Applications	3-20
	Compressor with Soft Start	3-21
	Tumbler with Soft Start	3-22
	Tumbler with Soft start and SMB Smart Motor Braking Option	3-23
	Tumbler with Accu-Stop Option	3-24
	Pump with Soft Start	3-25
	Pump with Pump Control Option	3-26
	Bandsaw with Soft Start	3-27
	Bandsaw with Soft Start and SMB Smart Motor Braking Option	3-28
	Bandsaw with Slow Speed with Braking Option	3-29
	Trolley with Soft Start	3-30
	Trolley with Preset Slow Speed Option	3-31
	Exhaust Fan with Soft Start	3-32
	Palletizer with Soft Start	3-33
	Palletizer with Soft Start and Preset Slow Speed Option	3-34
	Rock Crusher with Soft Start	3-35
	Shredder with Soft Start	3-36
	Hammermill with Current Limit Start	3-37
	Hammermill with Current Limit and SMB Smart Motor Braking Option	3-38

Chapter	Title	Page
3 (continued)		
	Centrifuge with Current Limit Start	3-39
	Centrifuge with Current Limit and SMB Smart Motor Braking Option	3-40
	Mixer with Soft Start	3-41
	Mixer with Preset Slow Speed Option	3-42
	Chiller with Soft Start	3-43
	Wire Draw Machine with Soft Start	3-44
	Cooling Tower Fan with Soft Start	3-45
	Power Walk with Soft Start and Soft Stop Option	3-46
	Towline Conveyor with Soft Start	3-47
	Towline Conveyor with Soft Start and Soft Stop Option	3-48
	Chain Conveyor with Soft Start	3-49
	Chain Conveyor with Soft Stop Option	3-50
	Shuttle Car with Accu-Stop Option	3-51
	Die Changer with Accu-Stop Option	3-52
	Grinder with Soft Start	3-53
	Grinder with Soft Start and SMB Smart Motor Braking Option	3-54
	Crane with Soft Start	3-55
	Rotary Table with Accu-Stop Option	3-56
	Bottle Filler with Soft Start and Soft Stop Option	3-57
	Ball Mill with Current Limit Start	3-58
	Ball Mill with SMB Smart Motor Braking Option	3-59
	Ball Mill with Accu-Stop Option	3-60
4	Applications Matrix	
	Description	4-1
	Mining and Metals	4-2
	Food Processing	4-3
	Pulp and Paper	4-4
	Petrochemical	4-5
	Transportation and Machine Tool	4-6
	OEM Specialty Machines	4-7
	Lumber and Wood Products	4-8
	Water/Wastewater Treatment and Municipalities	4-9



Table of Contents

Chapter	Title	Page
5	**Special Application Considerations**	
	Smart Motor Controllers in Drive Applications	5-1
	Use of Protective Modules	5-1
	Current Limit Fuses (Overcurrent Protection of SCRs)	5-3
	Motor Overload Protection	5-4
	Power Factor Capacitors	5-4
	Multimotor Applications	5-6
	Wound Rotor Motors	5-6
	Altitude De-Rating	5-6
	Isolation Contactor	5-7
	Typical Connection with Isolation Contactor	5-7
	Smart Motor Controller with By-Pass Contactor	5-8
	Smart Motor Controller with Reversing Contactor	5-8
	Smart Motor Controller as a By-Pass to an AC Drive	5-9
	Smart Motor Controller with a Bulletin 1410 Motor Winding Heater	5-10
	Motor Torque Capabilities with SMC PLUS Controller Options	5-11
	SMB Smart Motor Braking	5-11
	Preset Slow Speed	5-11
	Accu-Stop Option	5-12
	Energy Saver	5-12
	Energy Saver Operation	5-12
	Background	5-13
	Application Requirements	5-13
	Preliminary Estimates	5-14
	Sample Calculation	5-15
6	**Design Philosophy**	
	Philosophy	6-1
	Line Voltage Conditions	6-1
	Current and Thermal Ratings	6-1
	Mechanical Shock	6-1
	Set-Up and Staying Up	6-2
7	**Reduced Voltage Starting**	
	Introduction to Reduced Voltage Starting	7-1
	Reduced Voltage	7-1
	Solid-State	7-5
8	**Solid State Starters Using SCRs**	
	Solid State Starters Using SCRs	8-1

Chapter	Title	Page
9	**Reference**	
	Introduction	9-1
	Motor Output Speed/Torque/Horsepower	9-1
	Torque and Horsepower	9-1
	Motor Output for NEMA Design Designations Polyphase 1-500 HP	9-7
	Calculating Torque	9-12
	Calculating Horsepower	9-12
	Inertia	9-12
	Torque Formulas	9-13
	AC Motor Formulas	9-13
	Torque Characteristics on Common Applications	9-14
	Electrical Formulas	9-17
	Calculating Motor Amperes	9-18
	Other Formulas	9-18
	Engineering Constants	9-19
	Conversion Factors	9-21
	Glossary	

List of Figures / Tables

Figure/Table	Title	Page
1.1	STC Controller (11, 16, and 22 Amps)	1-1
1.2	Torque Developed in a Typical Across the Line Start	1-2
1.3	STC Controller Response	1-2
1.4	Line Response Versus STC Controller Response	1-2
1.5	STC Controller Adjustments	1-3
1.6	Typical Wiring Diagram for STC Controller	1-4
1.7	Typical Wiring Diagram for STC Controller - Reversing	1-4
---	Chain Conveyor with Torque Control	1-6
---	Crane with Torque Control	1-7
---	Aircraft Hangar Door	1-8
2.1	SMC-2 Controller (5 - 54 Amps)	2-1
2.2	Soft Start	2-2
2.3	Current Limit Start	2-2
2.4	Full Voltage Start	2-2
2.5	SMC-2 Controller Adjustments	2-4
2.6	Series Controller	2-5
2.7	Interface Option (5 - 16 Amps)	2-6
2.8	Soft Start with Soft Stop	2-6
2.9	Wiring with Interface Option (5 - 16 Amps)	2-7
2.10	SMC-2 Controller with Bulletin 193 Overload Relay	2-8
---	Conveyor with Soft Start	2-9
---	Tumbler with Soft Start	2-10
---	Power Walk with Soft Start and Soft Stop Option	2-11
---	Towline Conveyor with Soft Start and Soft Stop Option	2-12
---	Bottle Filler with Soft Start and Soft Stop Option	2-13
---	Grinder with Soft Start	2-14
3.1	SMC PLUS Controller (24 - 1000 Amps)	3-1
3.2	Soft Start with Kickstart	3-2
3.3	Current Limit Start	3-2
3.4	Full Voltage Start	3-3
3.5	Exploded View of 24 Amp Controller	3-4
3.6	Set-Up Procedure for Soft Start (without Options)	3-5
3.7	Typical Connection Diagram	3-6
3.8	Typical Connection Diagram for Retrofit Applications	3-7
3.9	Soft Stop	3-8
3.10	Soft Stop Terminal Wiring	3-8
3.11	Set Up Procedures - Soft Start Selection with Soft Stop Option	3-9
3.12	Pump Control Option	3-10
3.13	Typical Pump Control Terminal Wiring	3-10
3.14	Set Up Procedures - Pump Control Starting and Stopping	3-11
3.15	Preset Slow Speed	3-12
3.16	Preset Slow Speed Terminal Wiring	3-12
3.17	Set Up Procedures - Soft Start Selection with Preset Slow Speed Option	3-13
3.18	SMB Smart Motor Braking	3-14
3.19	Soft Stop Terminal Wiring	3-14
3.20	Set Up Procedures - Soft Start Selection with SMB Braking Option	3-15
3.21	Accu-Stop Option	3-16

List of Figures / Tables (continued)

Figure/Table	Title	Page
3.22	Accu-Stop Terminal Wiring	3-16
3.23	Set Up Procedures - Soft Start Selection with Accu-Stop Option	3-17
3.24	Slow Speed with Braking	3-18
3.25	Slow Speed with Braking Terminal Wiring	3-18
3.26	Set Up Procedures - Soft Start with Slow Speed with Braking Option	3-19
---	Compressor with Soft Start	3-21
---	Tumbler with Soft Start	3-22
---	Tumbler with Soft Start and SMB Smart Motor Braking Option	3-23
---	Tumbler with Accu-Stop Option	3-24
---	Pump with Soft Start	3-25
---	Pump with Pump Control Option	3-26
---	Bandsaw with Soft Start	3-27
---	Bandsaw with Soft Start and SMB Smart Motor Braking Option	3-28
---	Bandsaw with Slow Speed with Braking Option	3-29
---	Trolley with Soft Start	3-30
---	Trolley with Preset Slow Speed Option	3-31
---	Exhaust Fan with Soft Start	3-32
---	Palletizer with Soft Start	3-33
---	Palletizer with Soft Start and Preset Slow Speed Option	3-34
---	Rock Crusher with Soft Start	3-35
---	Shredder with Soft Start	3-36
---	Hammermill with Current Limit Start	3-37
---	Hammermill with Current Limit and SMB Smart Motor Braking Option	3-38
---	Centrifuge with Current Limit Start	3-39
---	Centrifuge with Current Limit and SMB Smart Motor Braking Option	3-40
---	Mixer with Soft Start	3-41
---	Mixer with Preset Slow Speed Option	3-42
---	Chiller with Soft Start	3-43
---	Wire Draw Machine with Soft Start	3-44
---	Cooling Tower Fan with Soft Start	3-45
---	Power Walk with Soft Start and Soft Stop Option	3-46
---	Towline Conveyor with Soft Start	3-47
---	Towline Conveyor with Soft Start and Soft Stop Option	3-48
---	Chain Conveyor with Soft Start	3-49
---	Chain Conveyor with Soft Stop Option	3-50
---	Shuttle Car with Accu-Stop Option	3-51
---	Die Changer with Accu-Stop Option	3-52
---	Grinder with Soft Start	3-53
---	Grinder with Soft Start and SMB Smart Motor Braking Option	3-54
---	Crane with Soft Start	3-55
---	Rotary Table with Accu-Stop Option	3-56
---	Bottle Filler with Soft Start and Soft Stop Option	3-57
---	Ball Mill with Current Limit Start	3-58
---	Ball Mill with SMB Smart Motor Braking Option	3-59
---	Ball Mill with Accu-Stop Option	3-60

Figure/Table	Title	Page
---	Mining and Metals	4-2
---	Food Processing	4-3
---	Pulp and Paper	4-4
---	Petrochemical	4-5
---	Transportation and Machine Tool	4-6
---	OEM Specialty Machines	4-7
---	Lumber and Wood Products	4-8
---	Water/Wastewater Treatment and Municipalities	4-9
5.1	Protective Modules	5-1
5.2	Clearing Time of Fuse	5-3
5.3	Power Factor Capacitors	5-4
5.4	Power Factor Capacitors with Isolation Contactor	5-5
5.5	Multimotor Applications	5-6
5.6	Typical Connection Diagram with Isolation Contactor	5-7
5.7	Typical Application Diagram of a By-Pass Contactor	5-8
5.8	Typical Application with a Single Speed, Reversing Starter	5-8
5.9	Typical Application Diagram of a By-Pass Contactor for an AC Drive	5-9
5.10	Typical Application Diagram of Smart Motor Controller with a Bulletin 1410 Motor Winding Heater	5-10
5.11	Starting and Running Torque	5-11
5.12	Maximum Torque at Maximum Current Settings	5-11
5.13	Accu-Stop Option	5-12
5.14	% kW Saved vs. % Rated Load	5-13
5.15	Estimated Energy Savings	5-13
5.16	Sample Calculations	5-15
7.1	Full Load Current vs. Speed	7-1
7.2	Bulletin 570 Autotransformer	7-2
7.3	Typical Voltage, Current and Torque Characteristics for NEMA Design B Motors	7-2
7.4	Open Circuit Transition vs. Closed Circuit Transition	7-3
7.5	Transition at Low Speed vs. Transition near Full Speed	7-4
7.6	Solid State Controllers	7-5
7.7	Soft Start	7-5
7.8	Current Limit Acceleration	7-6
8.1	Silicon Controlled Rectifier (SCR)	8-1
8.2	Typical Wiring Diagram of SCRs	8-1
8.3	Different Firing Angles (Single Phase Simplification)	8-2
9.1	Shaft and Wrench	9-1
9.2	Speed Torque Curve	9-3
9.3	Speed Torque Curve with Current Curve	9-4
---	NEMA Locked-Rotor Current Code Letters	9-5
9.4	Motor Safe Time vs. Line Current - Standard Induction Motors	9-6
9.5	Typical NEMA Design A Speed/Torque Curve	9-7
9.6	Typical NEMA Design B Speed Torque Curve	9-8
9.7	Typical NEMA Design C Speed/Torque Curve	9-9
9.8	Typical NEMA Design D Speed/Torque Curve	9-10
9.9	Motor Output – Comparison of NEMA Polyphase Designs	9-11
---	Torque Characteristics on Common Applications	9-14

Chapter 1 STC™ Starting Torque Controller

Description

The STC™ Starting Torque Controller is designed for low horsepower squirrel cage induction motors. It is intended to relieve the starting torque surge encountered in typical across-the-line starting. This will provide smoother starts and decrease downtime due to shock and vibration related problems.

The STC is a global product featuring 11, 16, and 22 Amp devices, 200-600V, 50/60 Hz., UL Listed, CSA Approved. Its compact design makes new installations as well as retrofitting easy. Setting the initial torque and ramp time of the controller is accomplished with digital rotary switches.

Figure 1.1
STC Controller (11, 16, and 22 Amps)

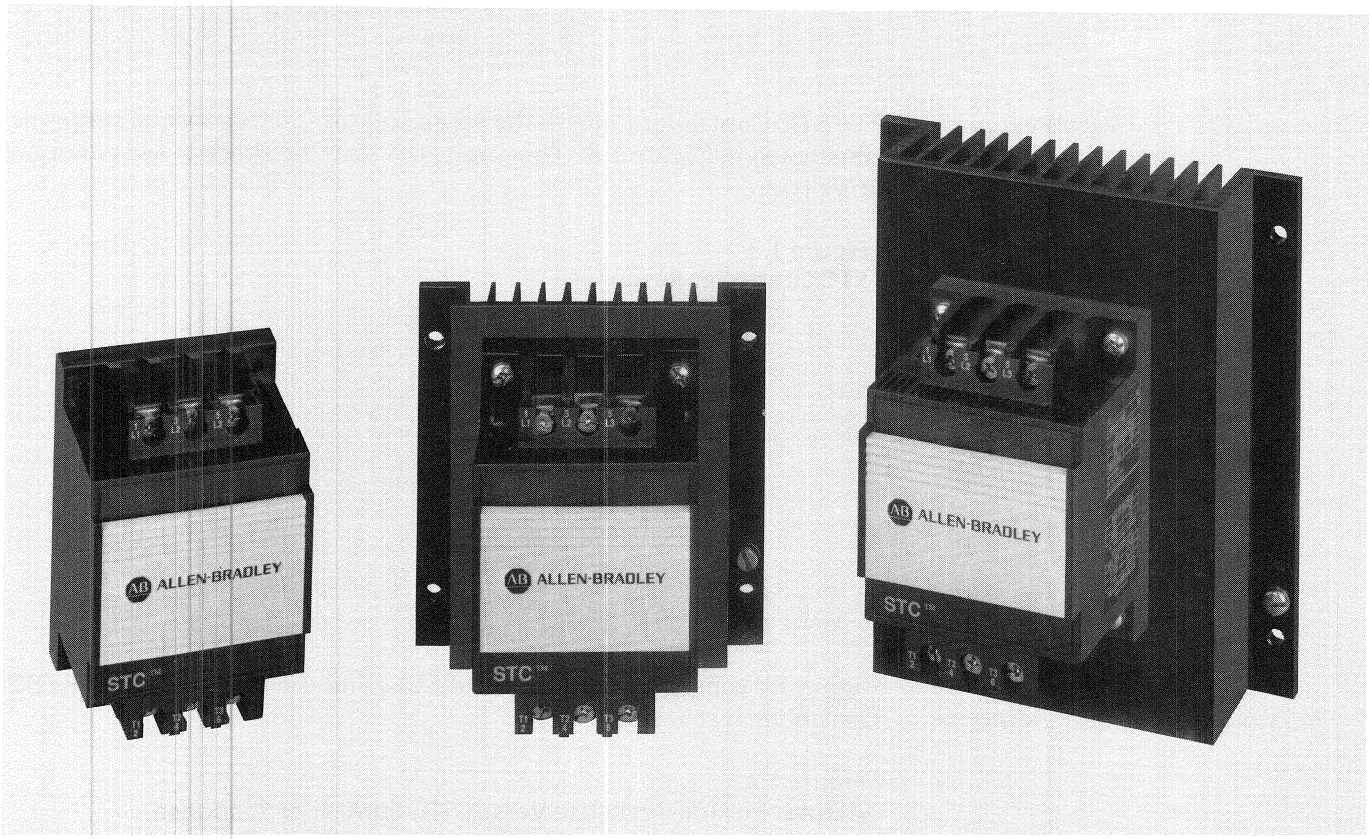

Modes of Operation

Across the Line Response

Excessive motor starting torque can damage the motor and drive equipment. Figure 1.2 illustrates the torque developed in a typical across the line start.

Figure 1.2
Torque Developed in a Typical Across the Line Start

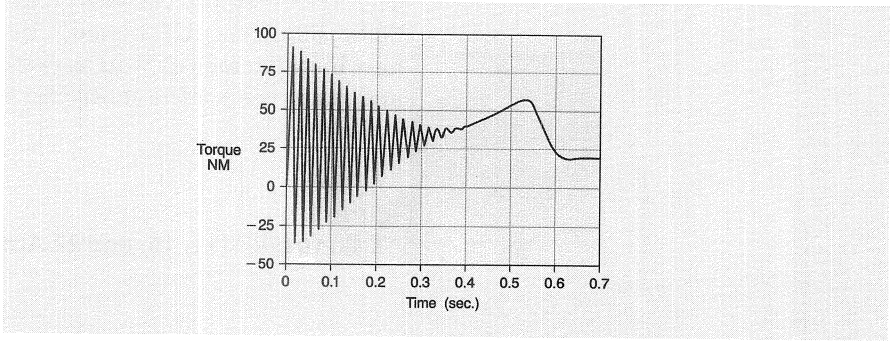

STC Controller Response

The STC Controller reduces the magnitude of starting torque surges as illustrated in Figure 1.3. This limits the starting shock to the motor and drive train.

Figure 1.3
STC Controller Response

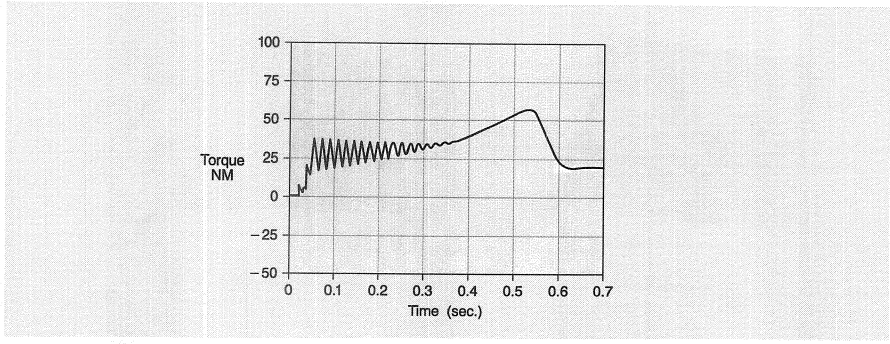

Across the Line Response Versus STC Controller Response

Figure 1.4 compares a typical across-the-line start response and the STC Controller response.

Figure 1.4
Across the Line Response Versus STC Controller Response

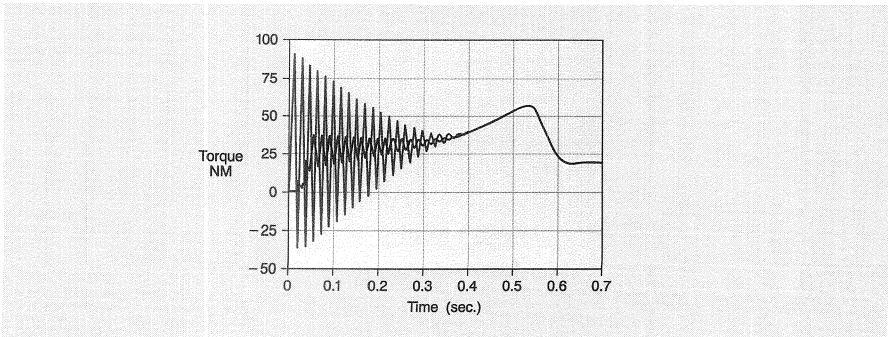

Features

The STC Controller is a compact device with feed through wiring for ease of installation. To set up the controller, adjust the digital rotary switches. The initial torque value is set between 10 and 80% of locked rotor torque. The voltage ramp time is adjustable from 0.1 to 4.5 seconds. This flexible combination enables the STC Controller to be installed in a wide variety of applications.

Adjustments

Figure 1.5
STC Controller Adjustments

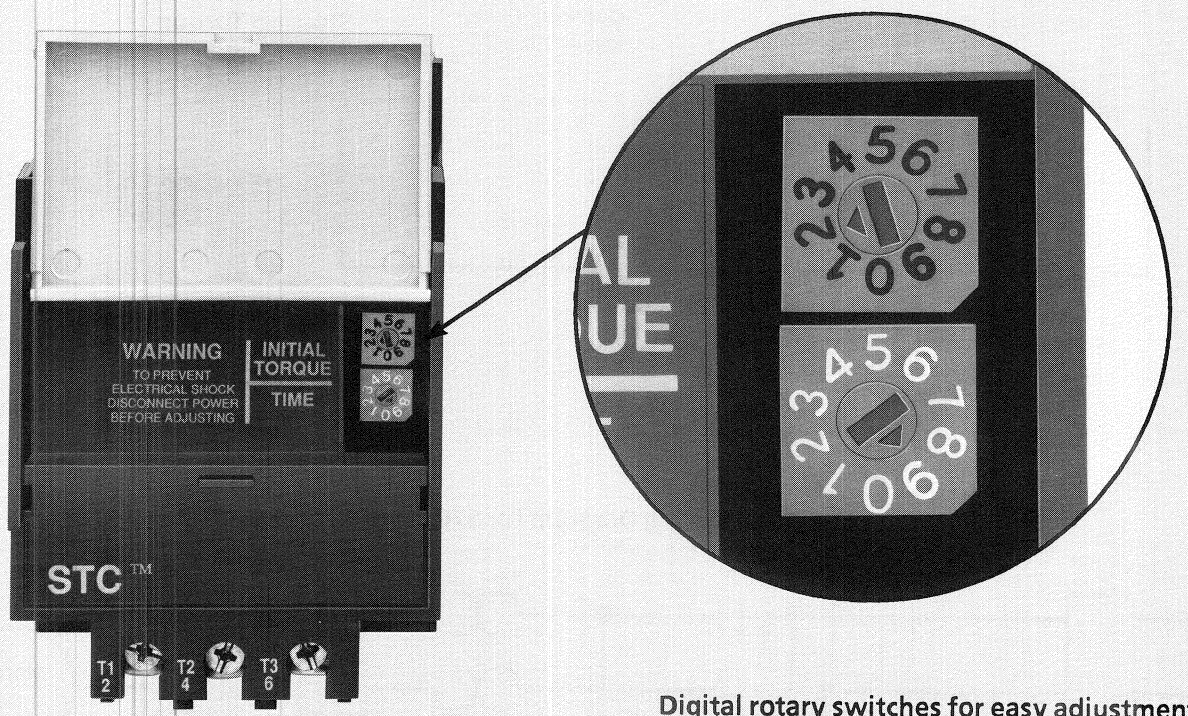

Digital rotary switches for easy adjustments

INITIAL TORQUE LEVEL (NOMINAL)

POSITION	0	1	2	3	4	5	6	7	8	9
% OF LOCKED ROTOR TORQUE	10	15	20	25	30	40	50	60	70	80

VOLTAGE RAMP TIME (NOMINAL)
(WITH INITIAL TORQUE SET AT 0)

POSITION	0	1	2	3	4	5	6	7	8	9
TIME (SECONDS)	0.1	0.5	1.0	1.5	2.0	2.5	3.0	3.5	4.0	4.5

Wiring Diagrams

Figure 1.6
Typical Wiring Diagram for STC Controller

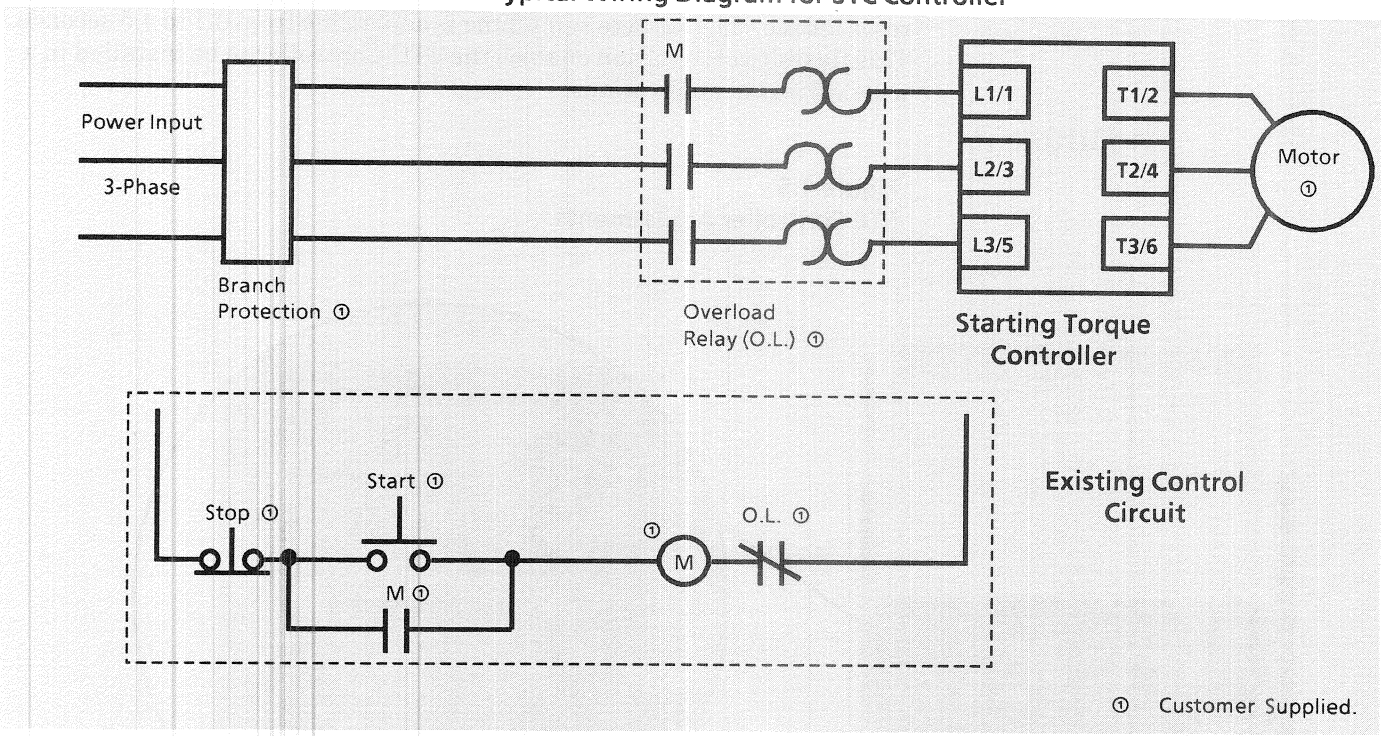

Figure 1.7
Typical Wiring Diagram for STC Controller - Reversing

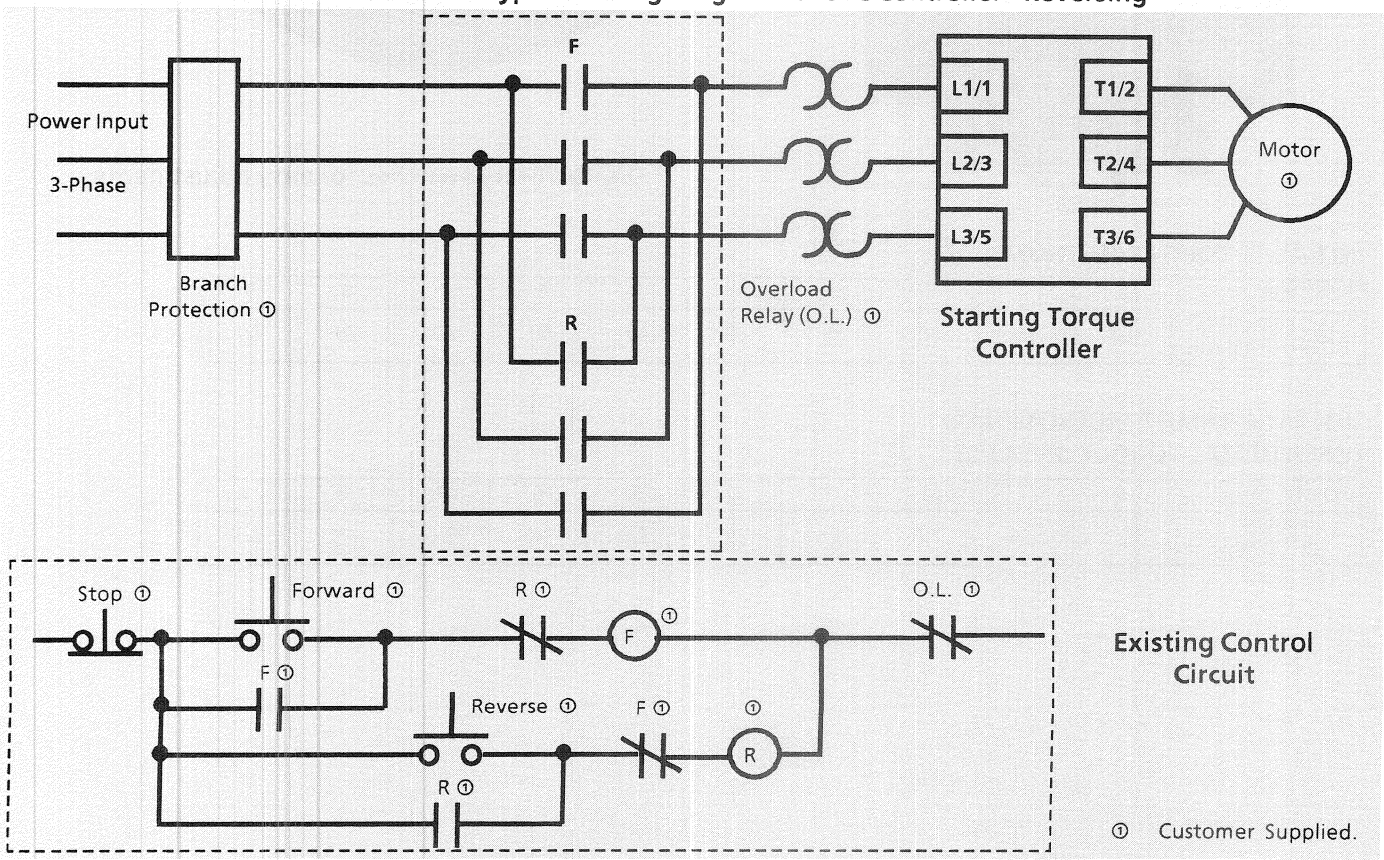

Applications

In this section a few of many STC Controller applications are described.

Illustrations are included to help identify the particular application. Motor ratings are specified but this may vary in other typical applications.

Typical applications include:

- Bridge Crane
- Trolleys
- Monorails
- Shrink Wrap Machines
- Overhead Doors
- Conveyors
- Material Handling Equipment

Suitable Replacement

The STC is a suitable replacement for:

- Wye-delta Starters
- Resistor Ballast Starters
- Line Reactors
- Clutches
- Flywheels
- Fluid Couplings
- Other Mechanical and Electrical Soft Start Devices

CHAIN CONVEYOR WITH TORQUE CONTROL

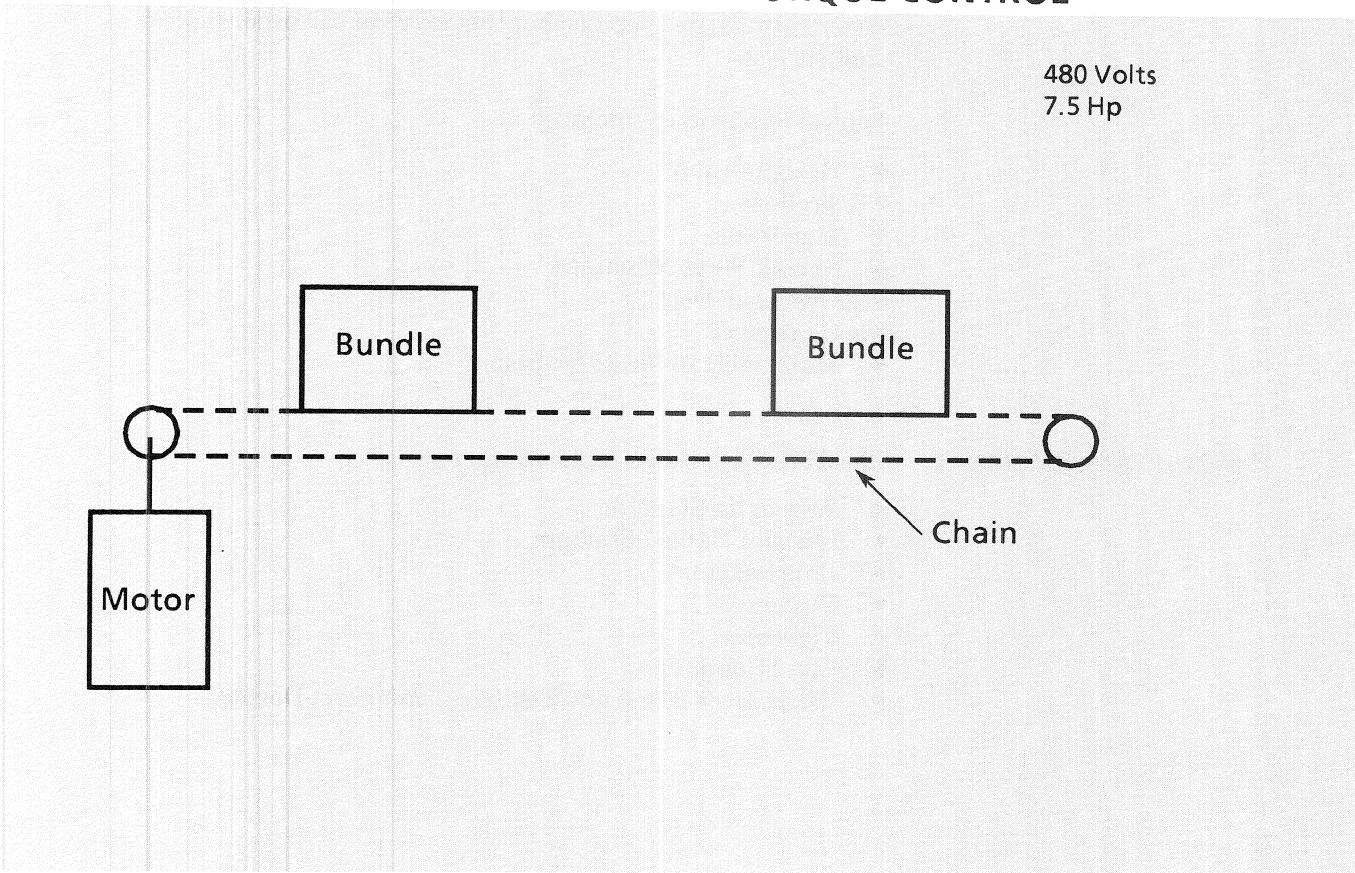

Problem: A chain conveyor is used for transporting bundles of paper. Due to the high starting torque the conveyor motor applies to the chain during startup, the chain was breaking on an average of once per day. Maintenance of the conveyor caused interruptions in the production schedule.

Solution: The STC Controller was installed to reduce the starting torque on the motor and mechanical system. This resulted in less downtime and higher productivity. The STC Controller was easy to retrofit due to its compact size and feed thru wiring.

CRANE WITH TORQUE CONTROL

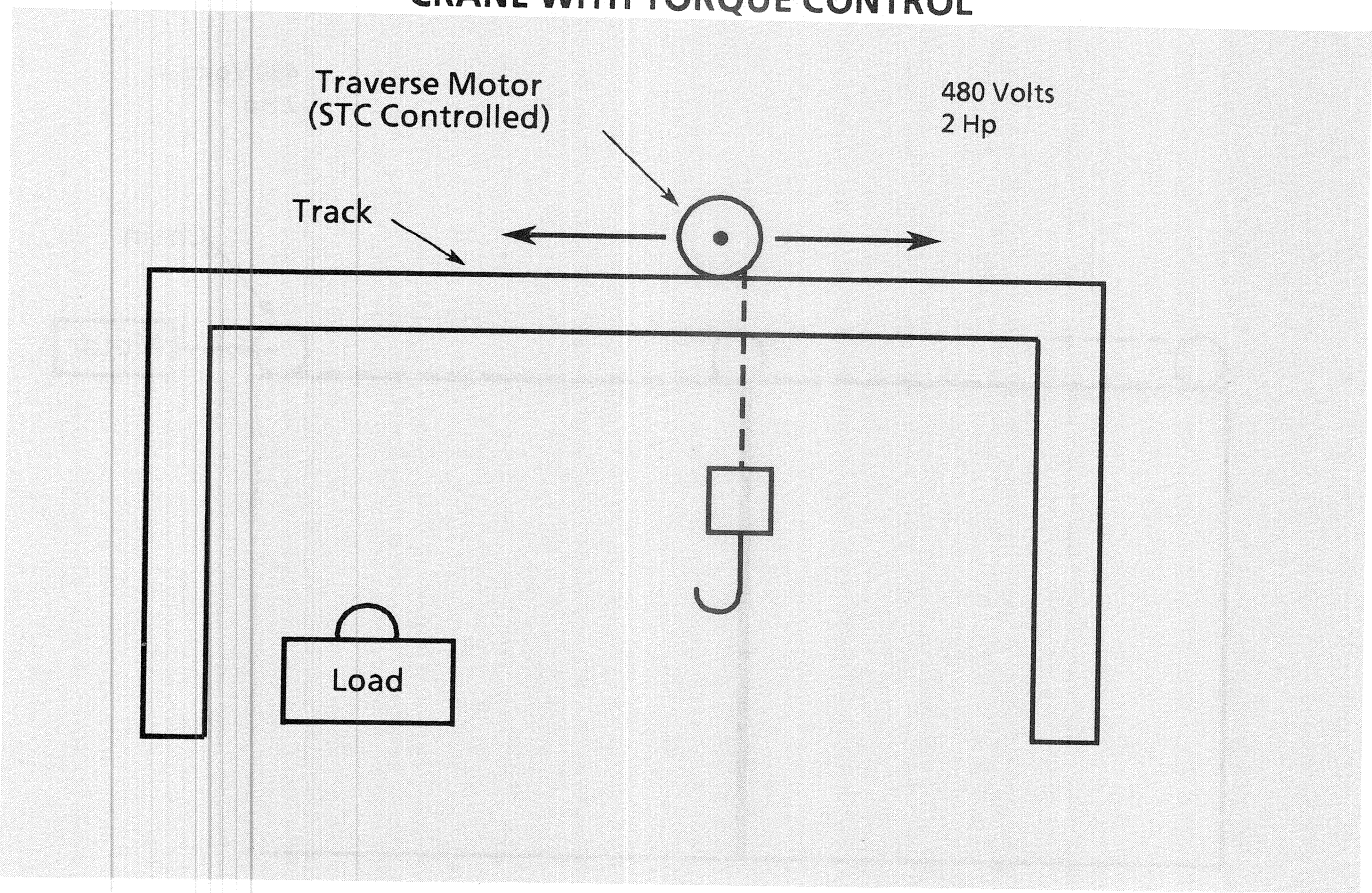

Problem: An overhead crane required frequent jogging due to adjustments in the traverse (horizontal) position. An across-the-line starter was used and this caused overshoot or undershoot when trying to position over a load.

Solution: The STC Controller was installed in the application. By reducing the starting torque of the motor, this allowed the crane to be positioned effectively. This meant fewer starts were required to position the crane over the load. This solution reduced the maintenance required as well as improved the productivity of the crane. The STC Controller was a cost effective solution.

AIRCRAFT HANGAR DOOR

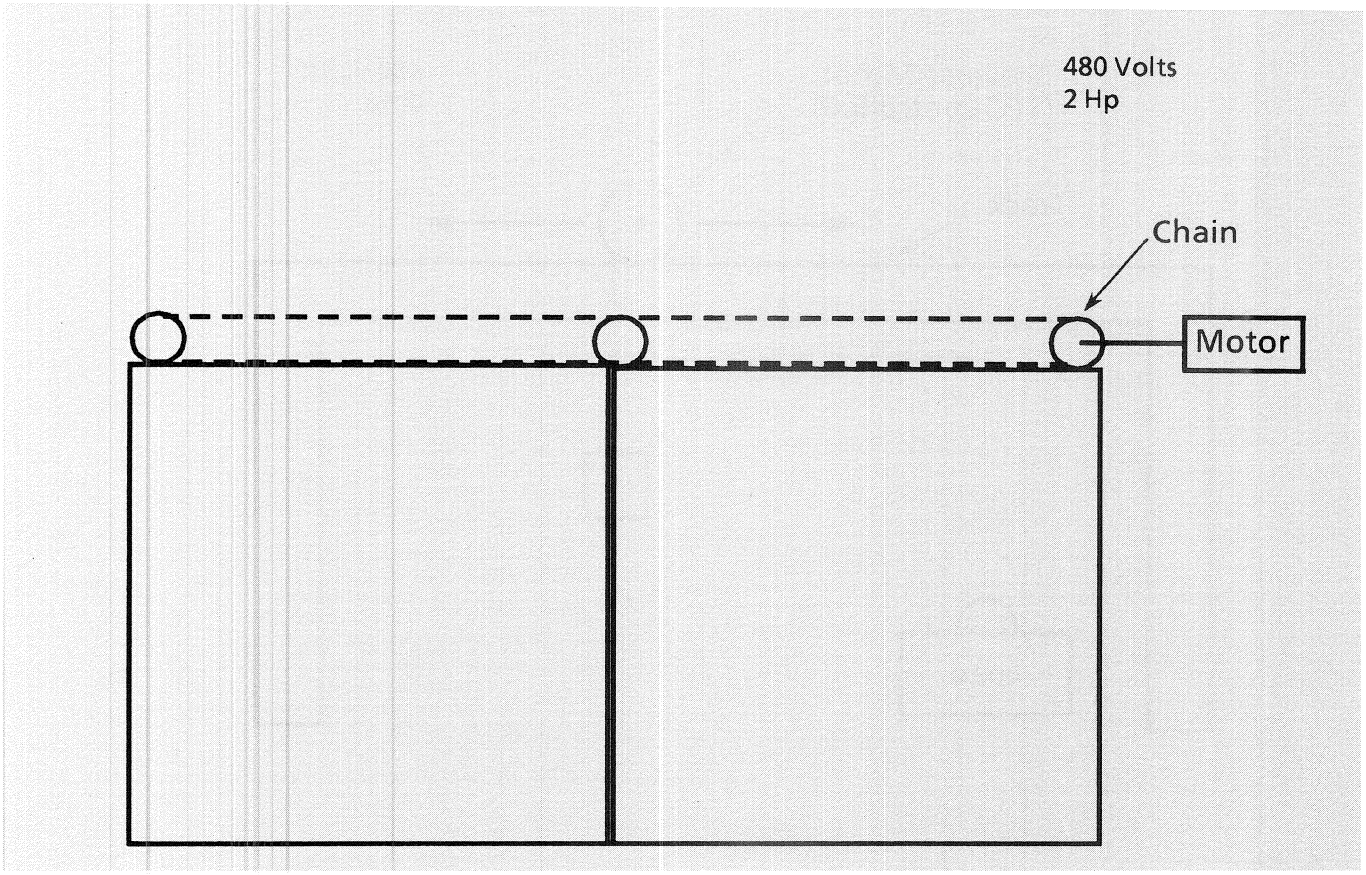

Problem: A chain driven aircraft hangar door was started across the line. The starting torque caused chain alignment problems. This required frequent inspection and maintenance.

Solution: An STC Controller was installed to provide controlled acceleration. This minimized the mechanical shock encountered during across-the-line starting and reduced maintenance inspection. The digital adjustments of the STC Controller were easily set and did not drift with age or vibration.

Chapter 2 SMC-2™ Smart Motor Controller

Description

The SMC-2™ Smart Motor Controller is a compact, multi-functional solid state controller used in starting standard three-phase squirrel cage induction motors and to control resistive loads.

The SMC-2 product line includes current ranges from 5 - 54 Amps, 200 to 600V, 50/60 Hz., UL Listed, CSA Approved. This covers applications up to 50 horsepower.

Figure 2.1
SMC-2 Controller (5 - 54 Amps)

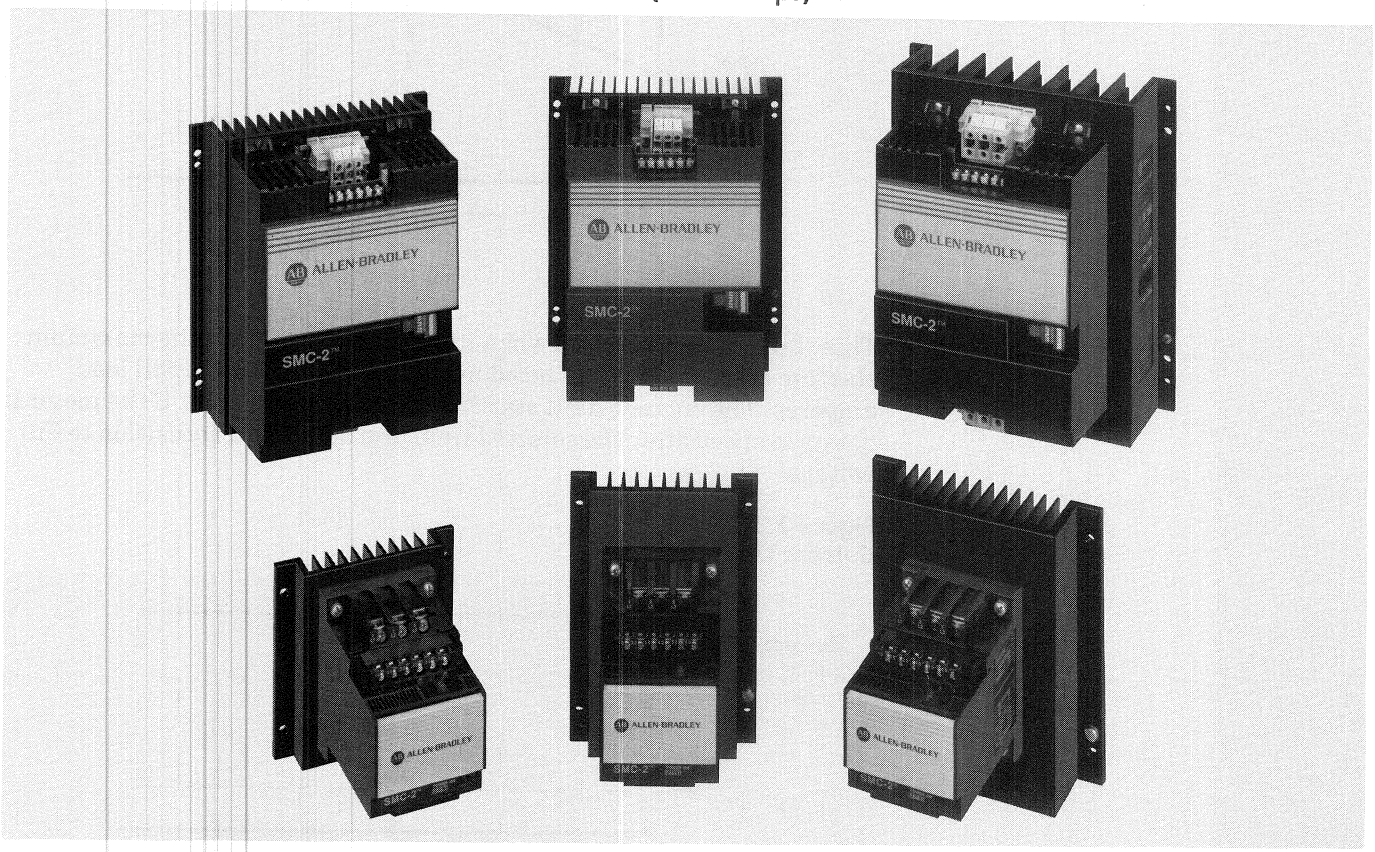

Modes of Operation

The following modes of operation are standard within a single controller:

- Soft Start
- Current Limit Start
- Full Voltage Start

The built-in energy saver feature allows the controller to conserve energy on applications where the motor is lightly loaded or unloaded for long periods of time.

Modes of Operation (continued)

Soft Start

This is the general method of starting. The initial torque value is set between 0 - 70% of locked rotor torque. The motor voltage is steplessly increased during the acceleration ramp period, which is adjustable from 2 - 30 seconds.

Figure 2.2
Soft Start

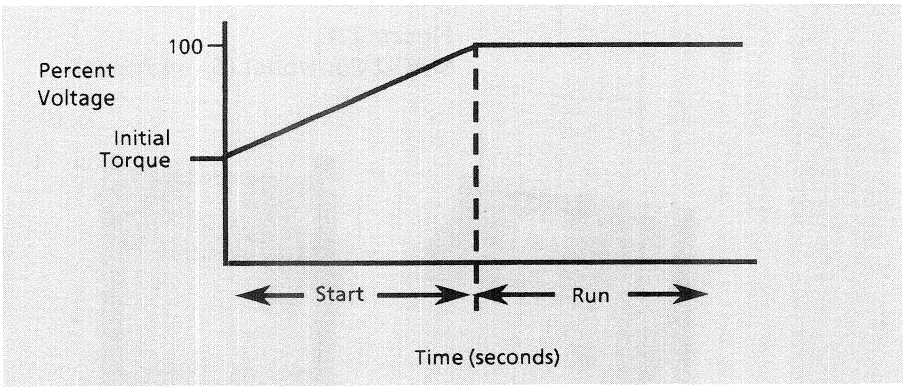

Current Limit Start

This starting mode is used when it is necessary to limit the maximum starting current. This can be adjusted from 25 to 550% of full load amperes. The current limit starting time is customer set. If the motor is not up to speed after the selected time, the motor will transition to full voltage.

Figure 2.3
Current Limit Start

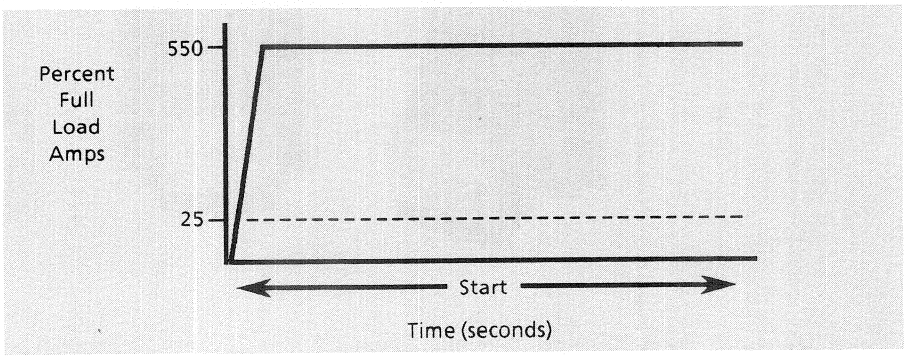

Full Voltage Start

This mode is used in applications requiring across the line starting. The ramp time is less than 1/10 second.

Figure 2.4
Full Voltage Start

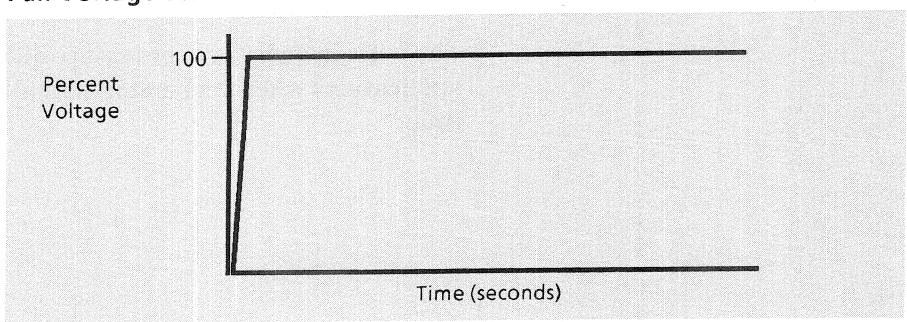

Features

Fault Trips

There is a single red LED on the front of the SMC-2 Controller for diagnostic indication. When three-phase power is applied to the controller, the LED will be on.

The SMC-2 Controller monitors the following fault conditions:

- Shorted SCR (pre-start only)
- Phase Loss (line side and pre-start only)
- Stalled Motor (when stall switch is on)

If a shorted SCR or phase loss exists, the SMC-2 Controller will not start and the LED will flash. If a stalled motor condition exists, the controller shuts down and flashes the LED. In the event three-phase input power is lost, the LED turns off.

Adjustments

Figure 2.5
SMC-2 Controller Adjustments

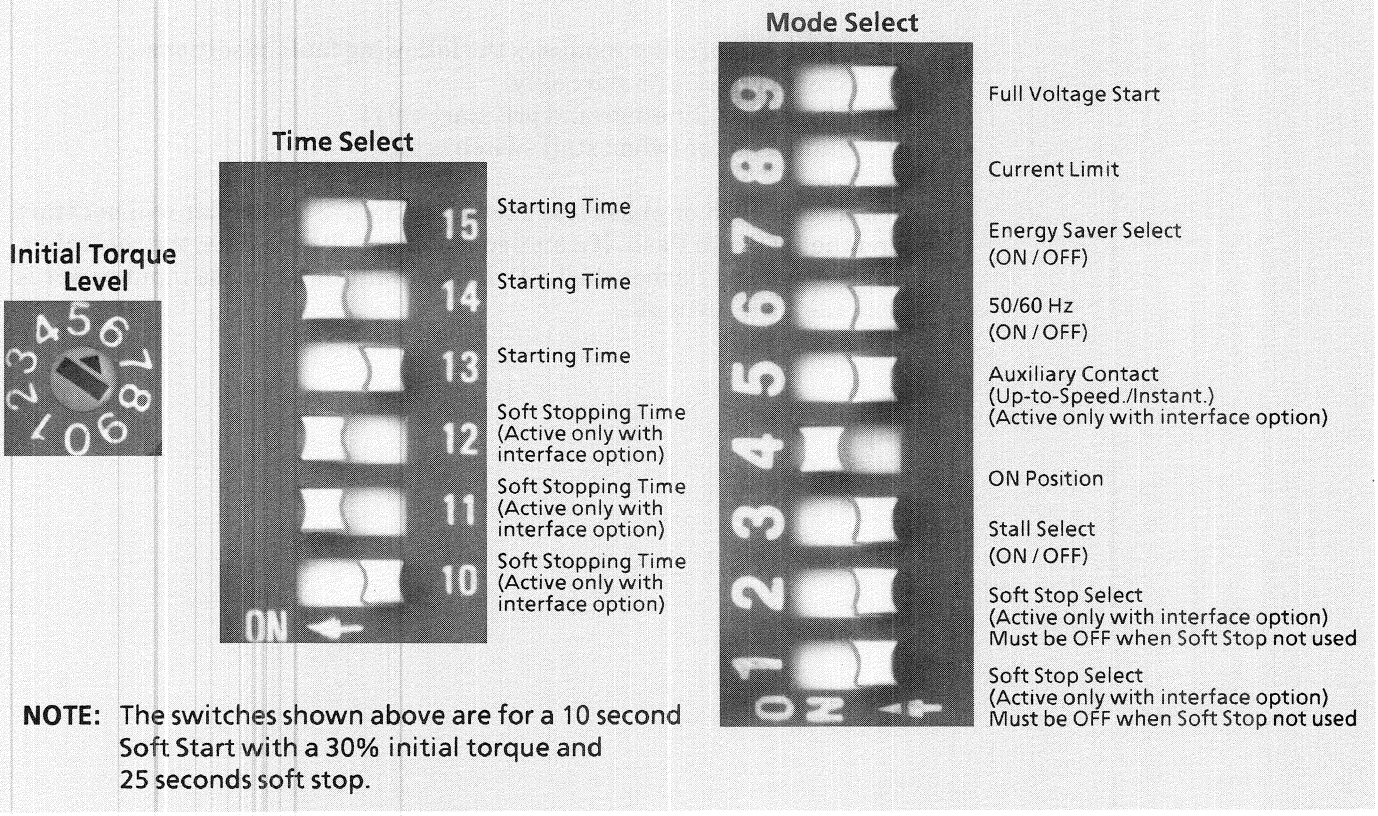

NOTE: The switches shown above are for a 10 second Soft Start with a 30% initial torque and 25 seconds soft stop.

Rotary Position Initial Torque Level

Position	0	1	2	3	4	5	6	7	8	9
% of Locked Rotor Torque	0	1	2	5	10	20	30	40	50	70

Soft StartTime

Switch Number	TIME (seconds)						
	2	5	10	15	20	25	30
15	Off	**ON**	Off	**ON**	Off	**ON**	Off
14	Off	Off	**ON**	**ON**	Off	Off	**ON**
13	Off	Off	Off	Off	**ON**	**ON**	**ON**

Soft Stop (Available only with interface option)

Switch Number	TIME (seconds)							
	5	10	15	25	35	45	55	110
12	Off	**ON**	Off	**ON**	Off	**ON**	Off	**ON**
11	Off	Off	**ON**	**ON**	Off	Off	**ON**	**ON**
10	Off	Off	Off	Off	**ON**	**ON**	**ON**	**ON**

Adjustments (continued)

Series Controller

The SMC-2 Controller is designed to operate with an electromechanical starter. The series mode has the following features:

- Eliminates need for additional control wiring, simplifying initial installation.
- Works with existing electromechanical starter, providing easy retrofits.

Figure 2.6
Series Controller

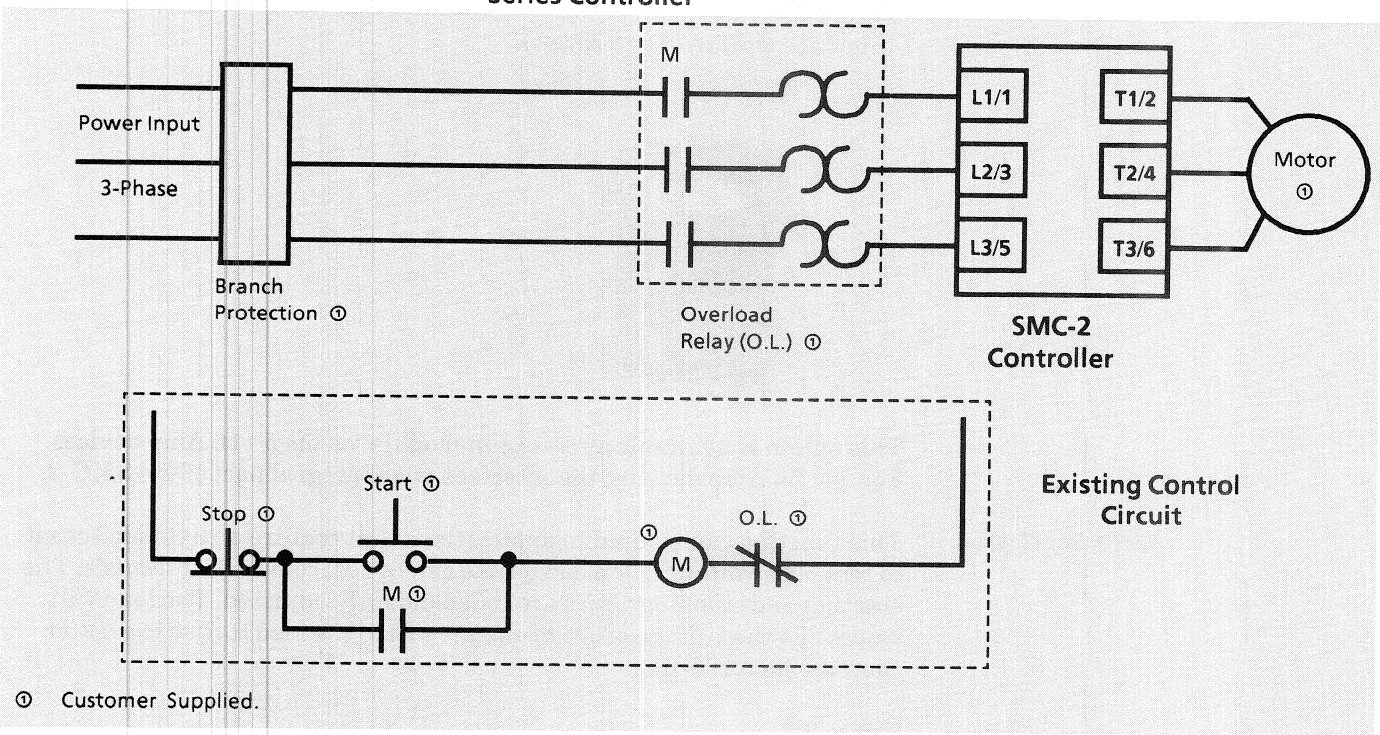

① Customer Supplied.

Options

Description of Interface Option

The SMC-2 Controller is designed to be operated by an external device. An optional interface is available for the SMC-2 Controller. This offers the following features:

- ON/OFF control directly to the controller through an external device. In many applications the interface may eliminate the need for an additional contactor. This reduces the panel space required.
- A configurable auxiliary contact which operates as either an instantaneous or up-to-speed contact.
- Soft Stop. This extends stopping time to minimize load shifting or spillage during stopping.

Figure 2.7
Interface Option (5 - 16 Amps)

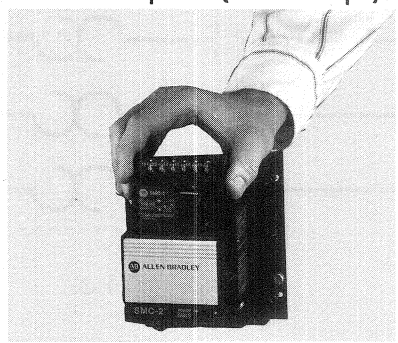

This option is available as a plug-in module for the 5 - 16 Amp devices. For 24 - 54 Amp devices, the interface is an integral part of the SMC-2.

Soft Stop Option

This function can be used in applications that require an extended coast to rest. The voltage ramp down time can be set from 5 - 110 seconds. The starting and stopping times are independently adjusted. The load will stop when the voltage drops to a point where the load torque is greater than the motor torque.

Figure 2.8
Soft Start with Soft Stop

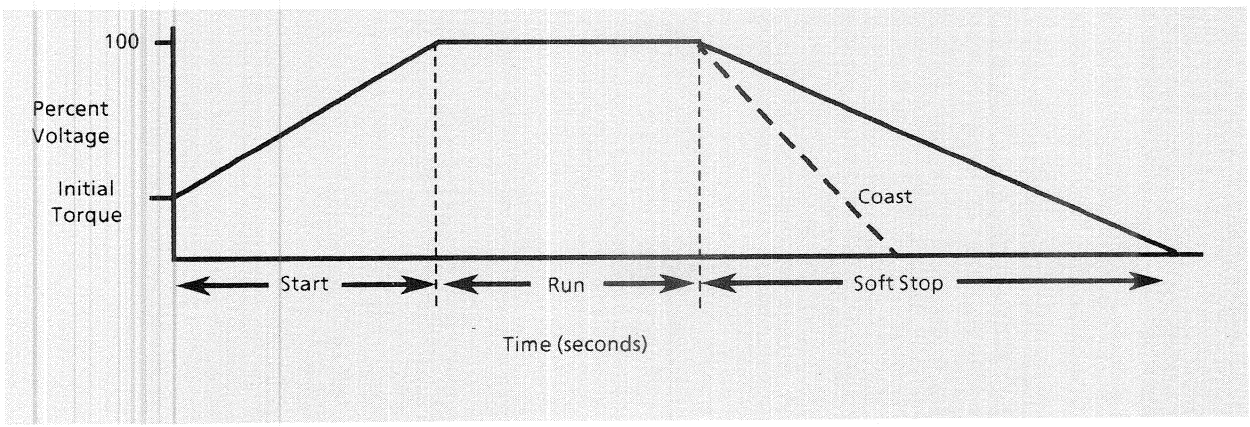

Options (Continued)

Wiring with Interface Option

Control power requirement for the interface option is 5VA at 120V and 15VA at 240V. Auxiliary contact rating is NEMA C300, 2.5 Amps, 20 - 250V AC: 1 Amp, 12 - 30V DC.

Figure 2.9
Wiring with Interface Option (5 - 16 Amps)

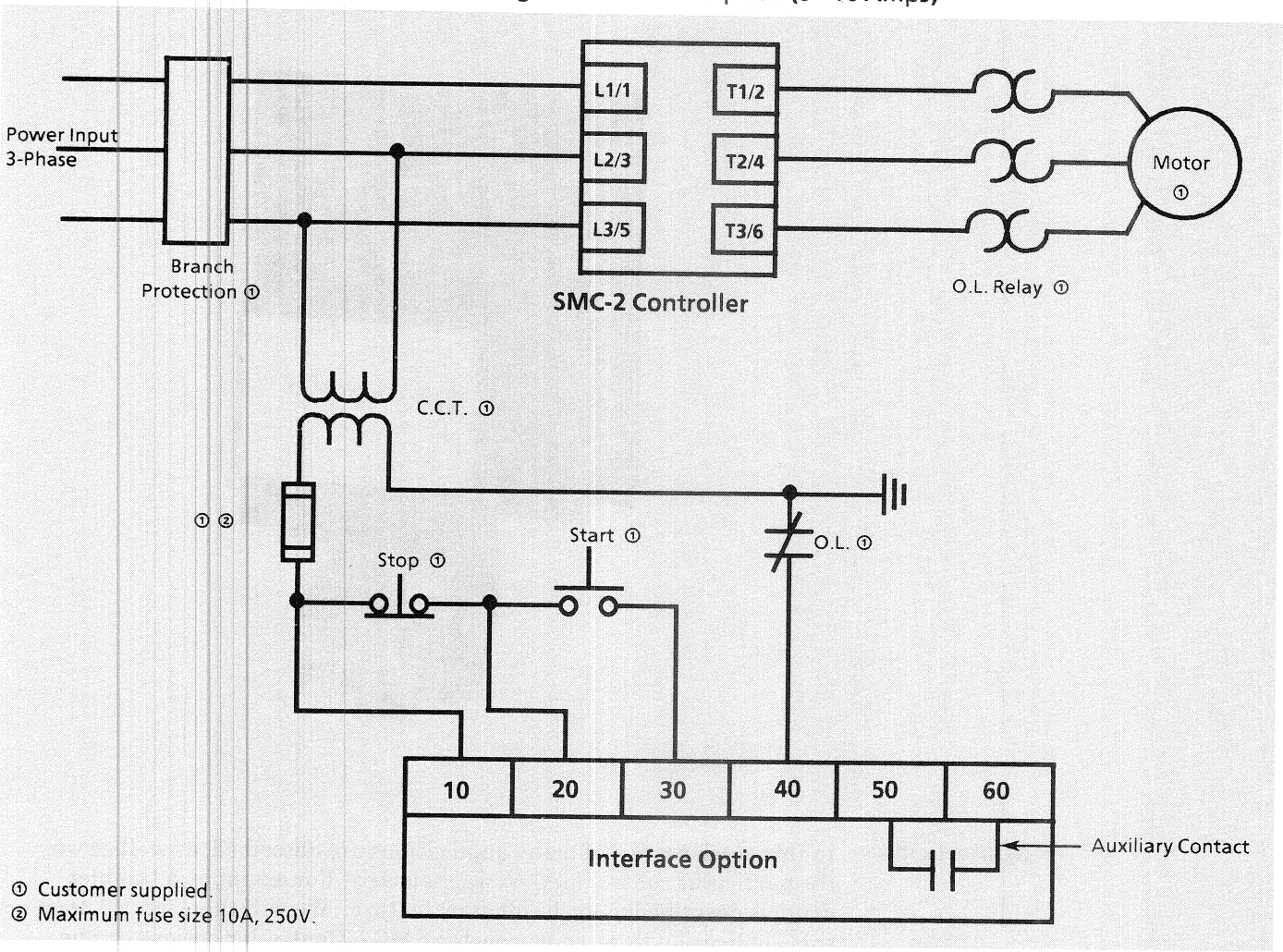

Options (Continued)

Overload Relay Option

To save additional panel space, IEC overload relays may be mounted directly to the 5, 9, and 16 Amp SMC-2 Controllers.

Figure 2.10
SMC-2 Controller with Bulletin 193 Overload Relay (5 - 16 Amp)

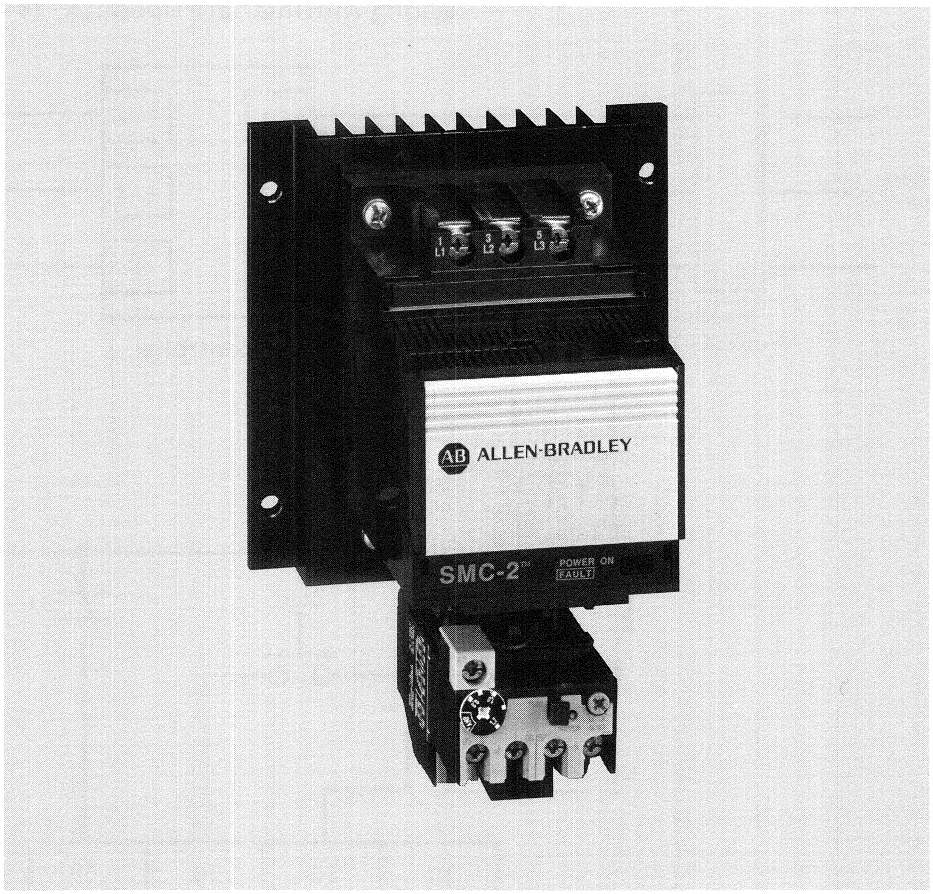

Applications

In this section a few of many applications are described, as well as why the particular control method was selected. For example, a tumbler drum is described using a soft start feature. We will then "build" upon this application to describe how the SMC-2 Controller options can be used to improve the tumbler drum performance and productivity.

Illustrations are included to help identify the particular application. Motor ratings are specified but this may vary in other typical applications.

CONVEYOR WITH SOFT START

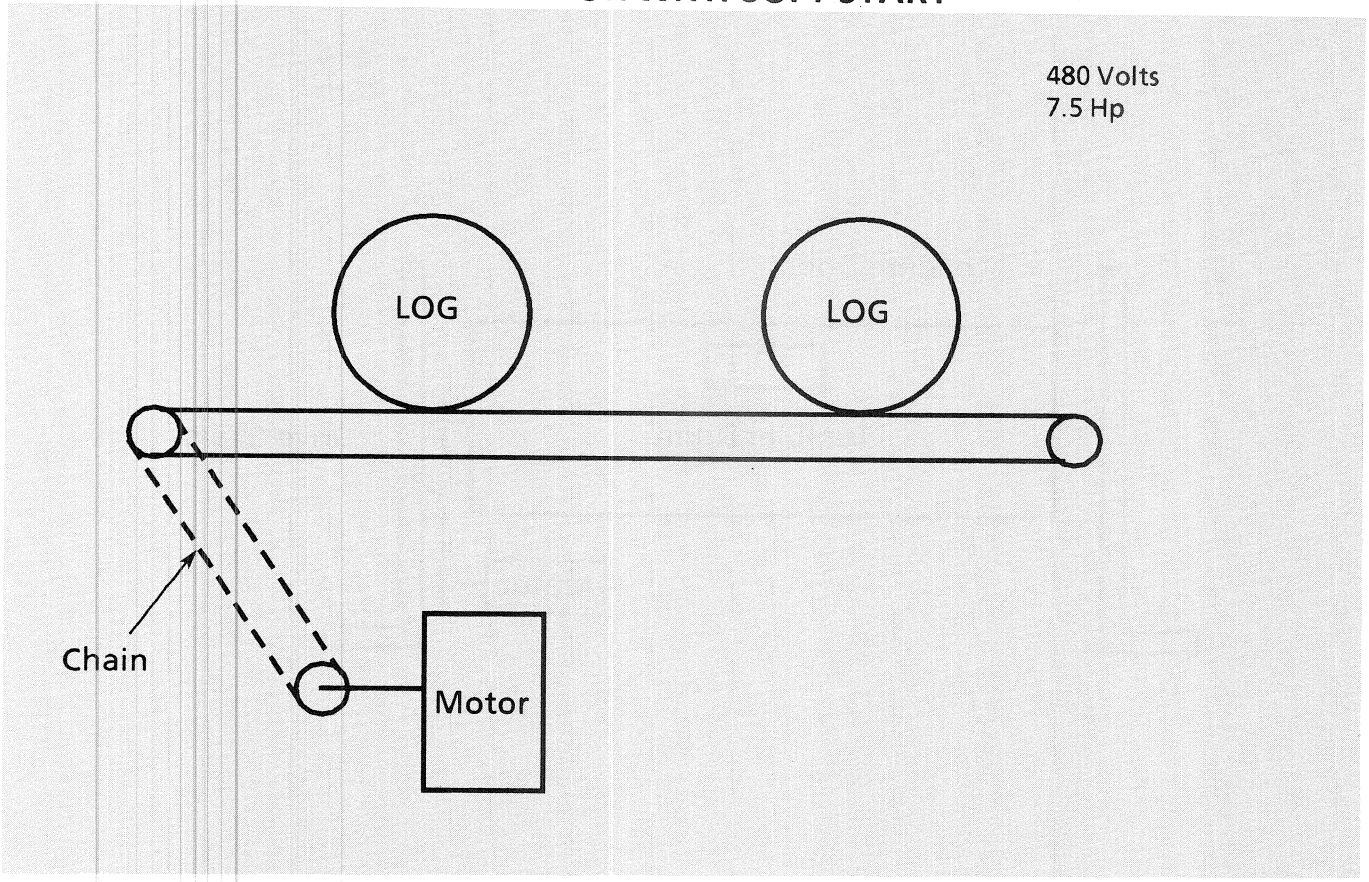

Problem: A conveyor is used to transport logs. The drive chain was breaking due to uncontrolled start-up. This caused interruptions in the production schedule and lost productivity. Panel space was very limited.

Solution: Due to its compact design, the SMC-2 was easily installed in the space vacated by the previous starter. A 10 second soft start was selected. This reduced the starting torque and the shock to the mechanical system.

TUMBLER WITH SOFT START

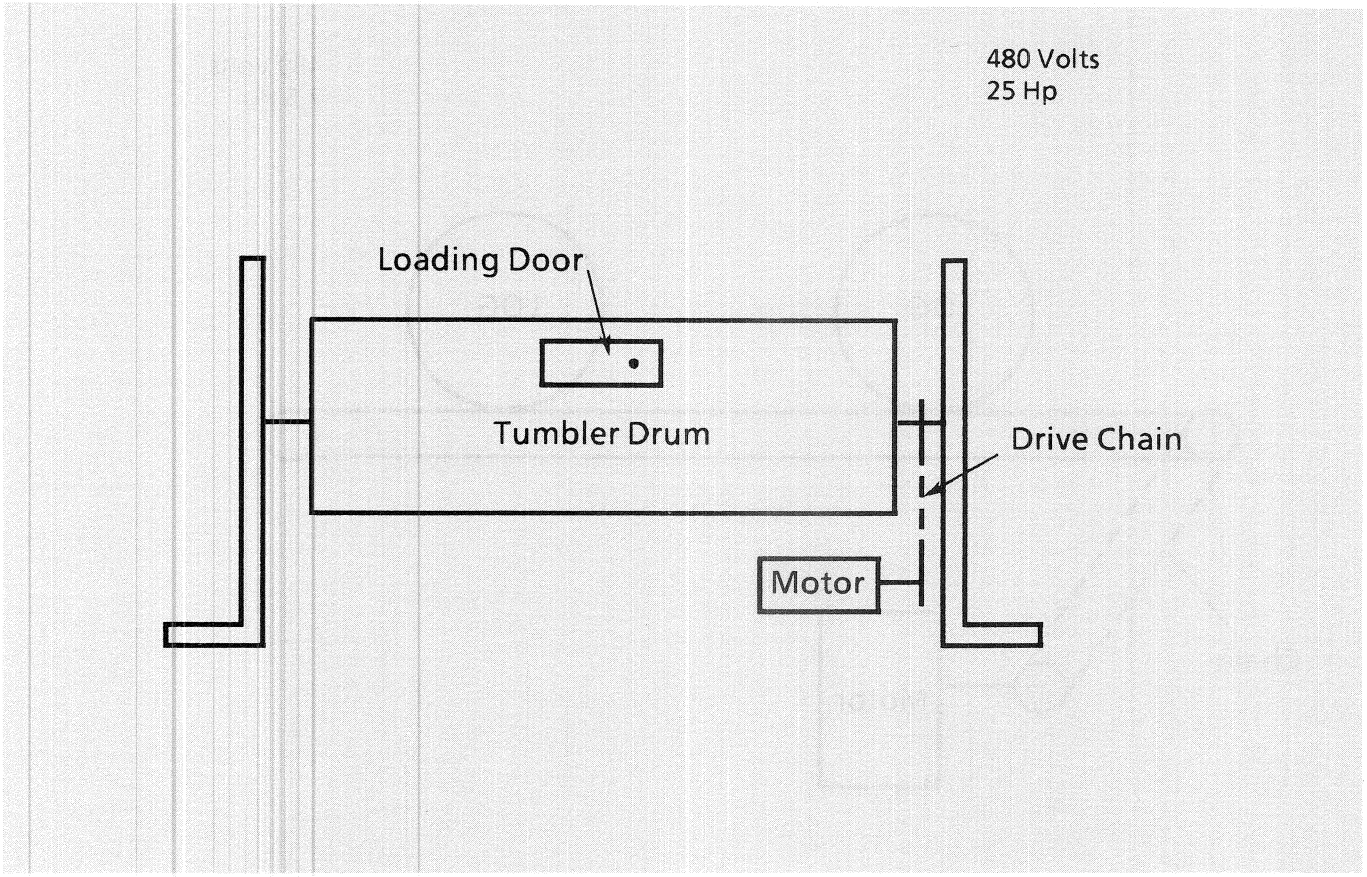

Problem: A tumbler used in a nail finishing process was breaking the drive chain due to the uncontrolled acceleration from the across-the-line start. In addition, a reversing starter was needed to position the drum to the top position for loading the product. Due to lack of controlled acceleration, numerous jogs were used to position the drum. The stopping time was not a concern in this application. In addition, single phasing of the motor was a frequent problem, causing premature motor failure.

Solution: The SMC-2 Controller was installed after the reversing contactor, to control the starting torque of the motor. This prevented the snapping of the drive chain on start up which increased the life of the chain and reduced the downtime on the tumbler. In addition, the SMC-2 Controller made it easier to jog the drum into position for loading and unloading. (The SMC -2 Controller slowed the acceleration rate to prevent overshoot.) This helped improve the productivity of the loading and unloading process. In addition, the SMC-2 Controller could quickly detect the phase failure during starting. The controller would prevent starting until the line had been corrected. This added additional standard protection to the motor and system.

POWER WALK WITH SOFT START AND SOFT STOP OPTION

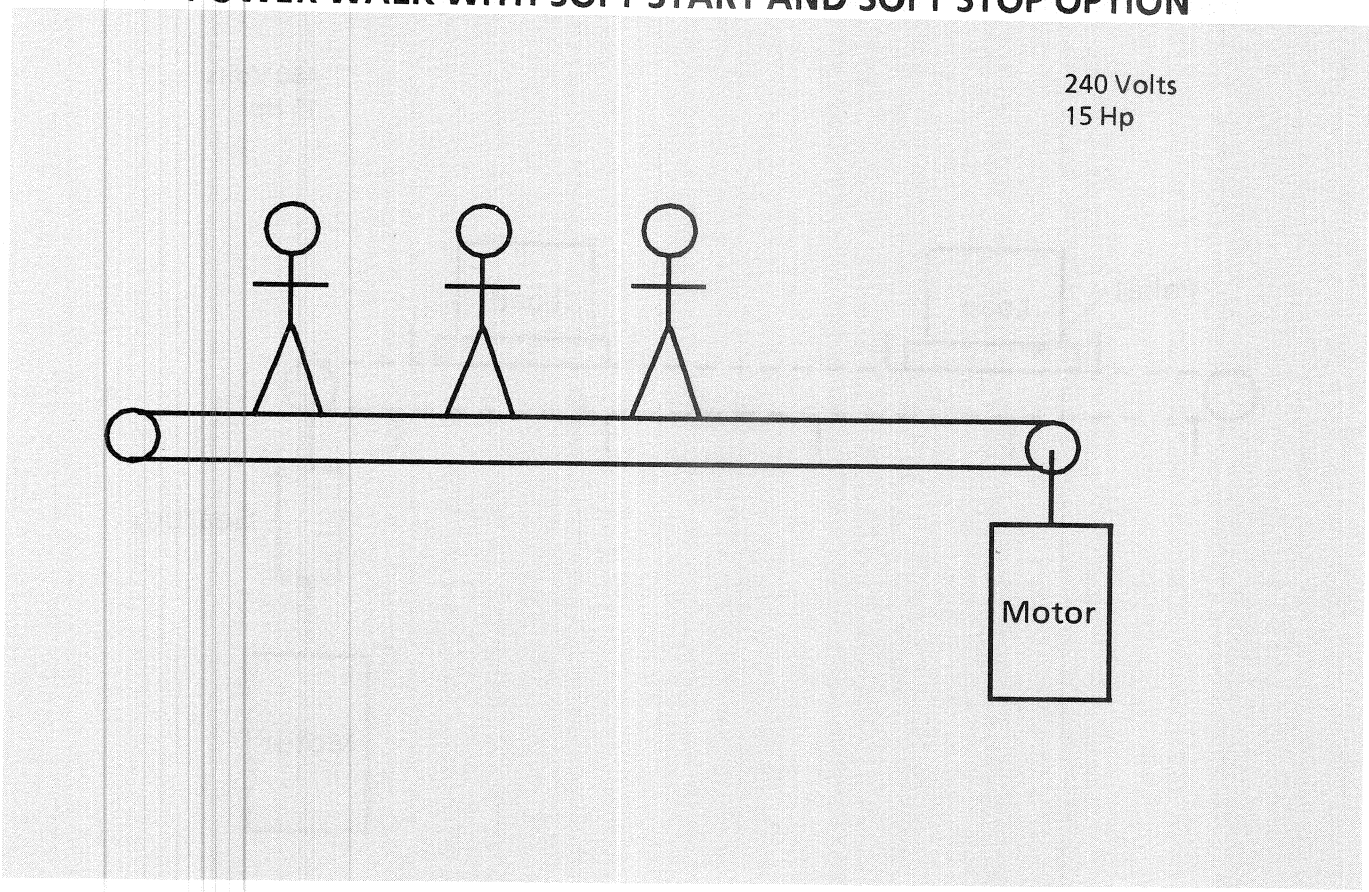

Problem: A power walk at an airport required a soft start to prevent damage to the drive chain gear box on start-up. A soft stop was also required in case the power walk would be shut off while people were still on the belt. There would be multiple units at the site, and a controller that could be quickly installed and adjusted was required.

Solution: The SMC-2 Controller with the Interface option was designed into the system. A 10 second soft start with the Energy Saver enabled was selected. A 10 second soft stop was also selected. This allowed the power walk to have a controlled start and stop. During periods where the walk was unloaded, the SMC-2 Controller Energy Saver reduced the voltage to the motor, minimizing the magnetic losses of the motor.

TOWLINE CONVEYOR WITH SOFT START AND SOFT STOP OPTION

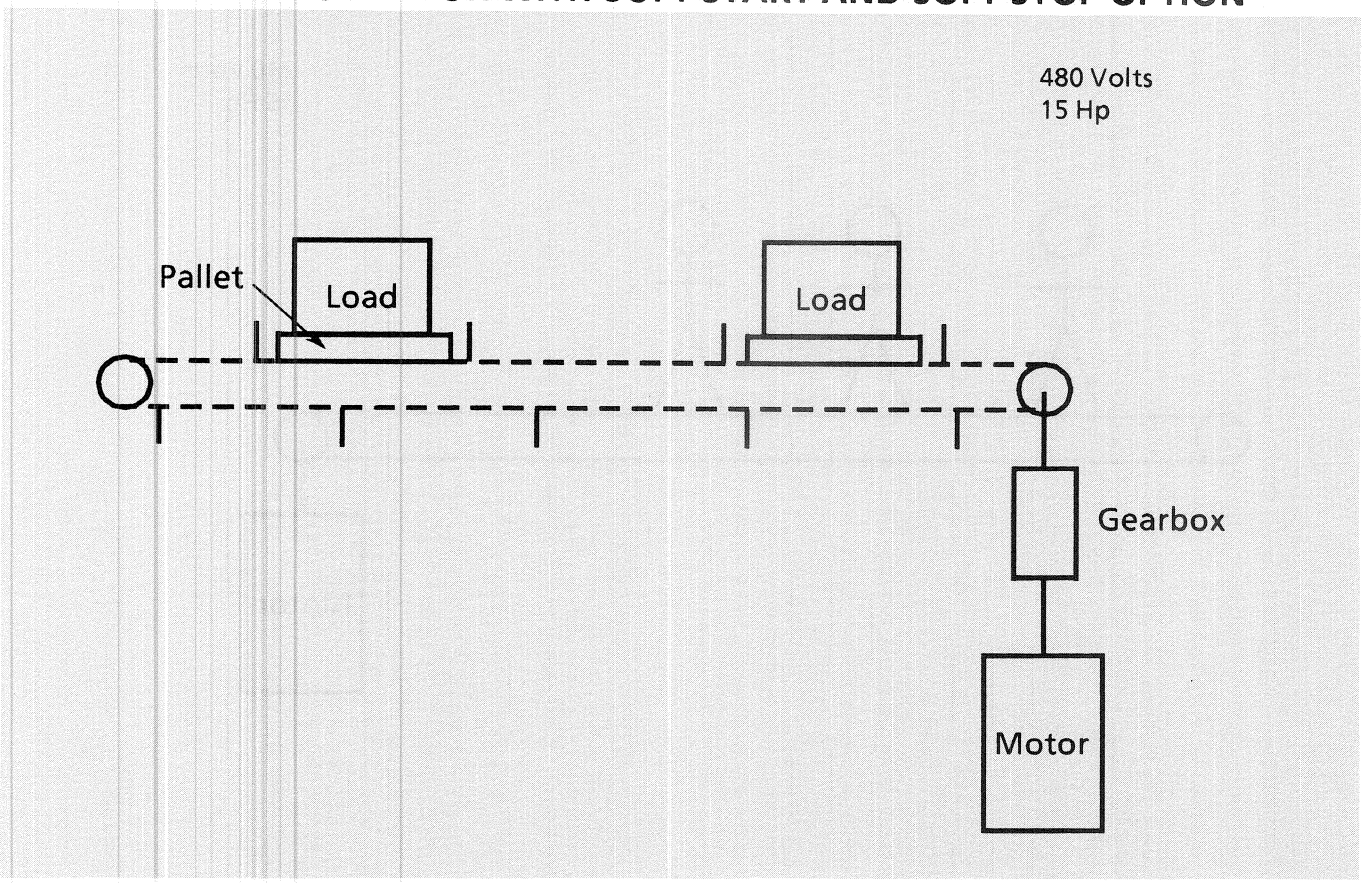

Problem: A towline conveyor at the end of a production line had frequent damage to the gear box due to the starting torque from across-the-line starting of the motor. There were frequent spills on both starting and stopping of the conveyor system.

Solution: The SMC-2 Controller with the Interface option was installed. 15 second starting and stopping times were selected. The reduced torque starting prevented shock to the gear box and kept the load from shifting on start-up. The soft stop prevented the load shifts while stopping. The SMC-2 Controller met the application requirements and was a cost effective solution.

BOTTLE FILLER WITH SOFT START AND SOFT STOP OPTION

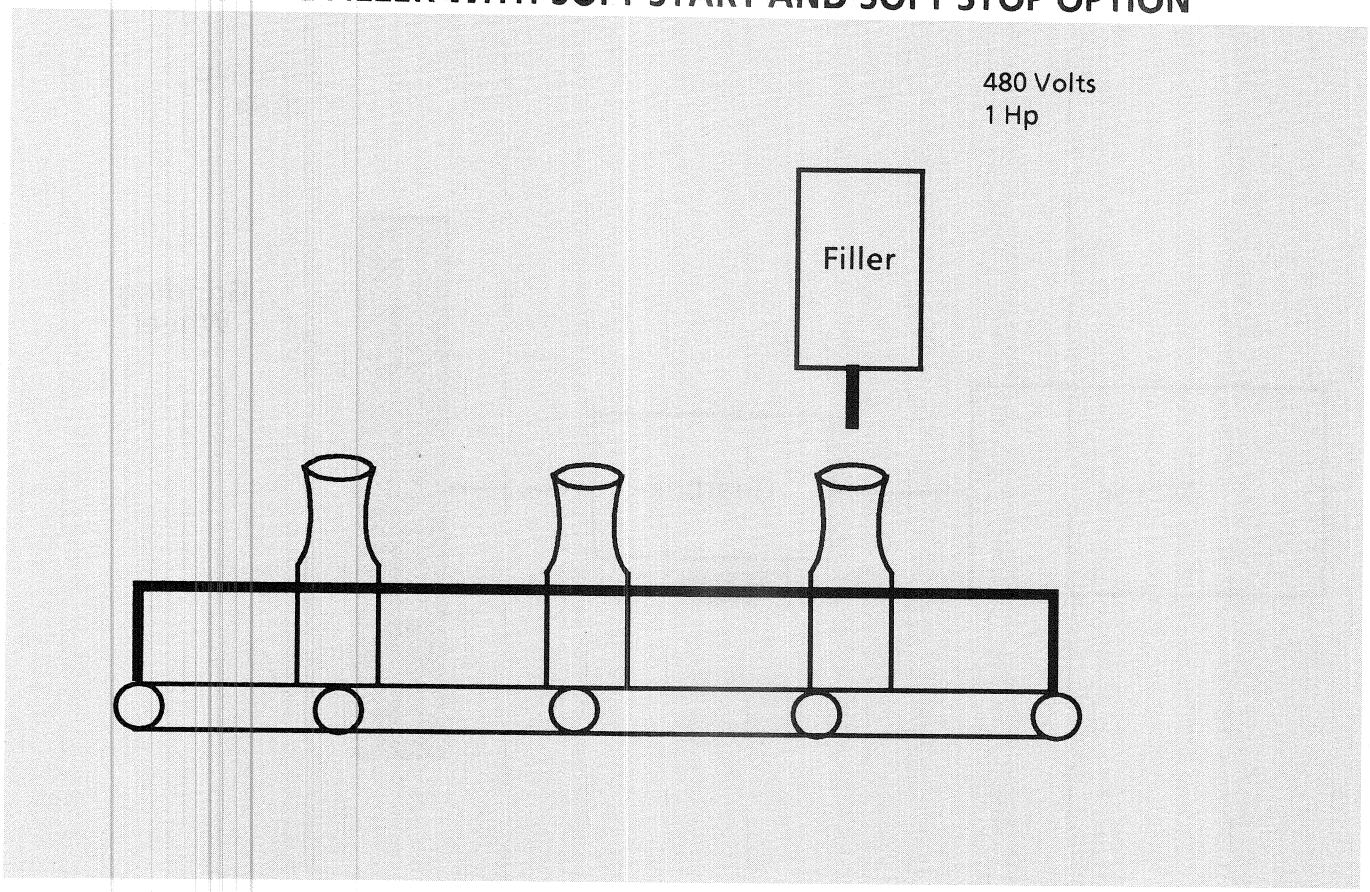

Problem: A bottle filler line had product spillage upon starting and stopping. An across-the-line starter was used to start the motor. In addition, the application required an auxiliary contact that would energize when the motor was up to speed.

Solution: The SMC-2 Controller was installed and set for a 10 second soft start with a 20 second soft stop. This controlled the starting torque and prevented the sudden start that would cause the bottles to spill. The soft stop extended the stopping time eliminating load shift while stopping. The auxiliary contact was configured to change state when the motor was up to speed.

GRINDER WITH SOFT START

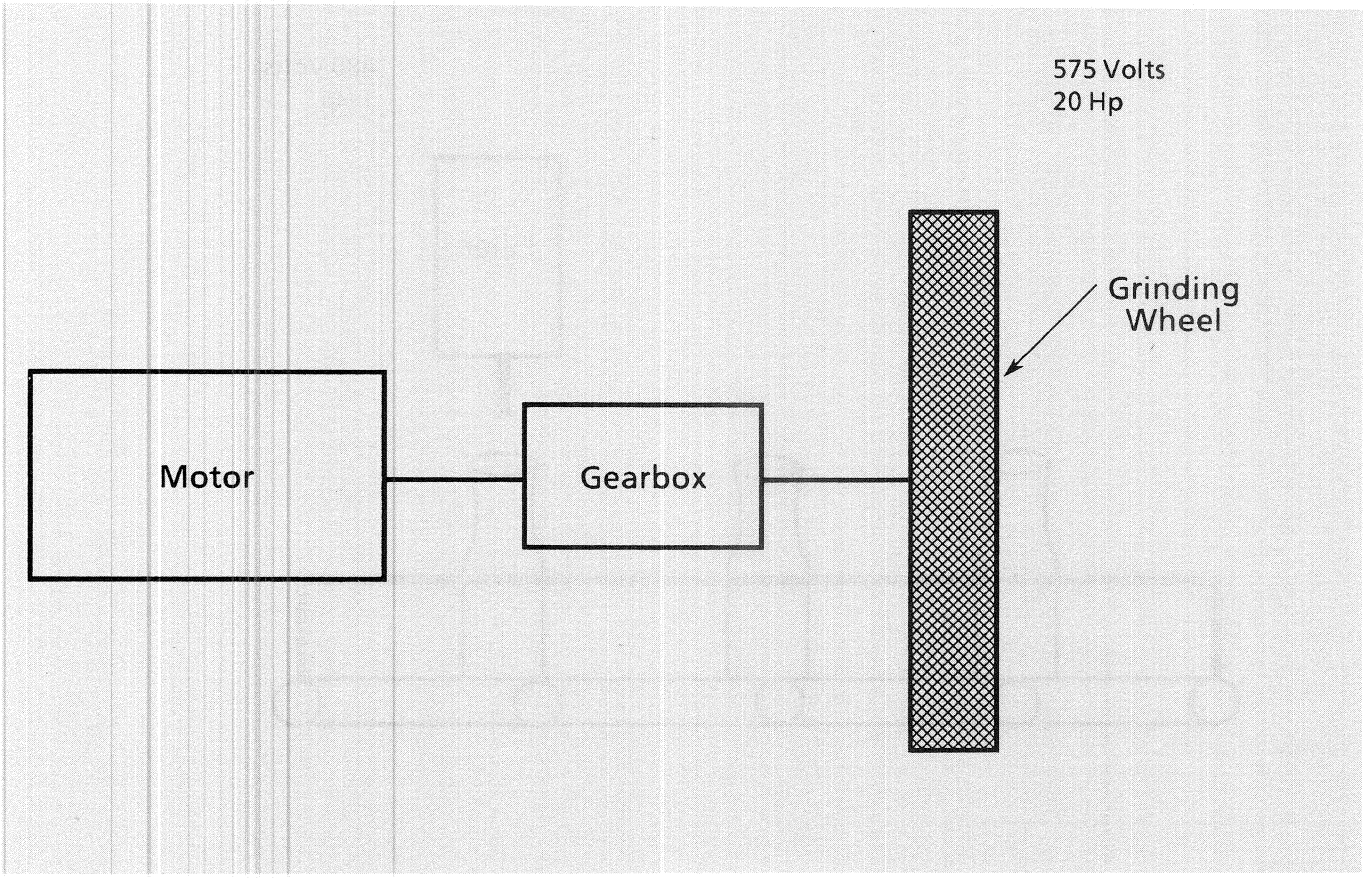

Problem: Due to the high starting torque developed from starting the motor across-the-line, the gears driving a grinding wheel were frequently damaged. This resulted in unscheduled downtime for repair. This application required a rugged device as vibration at the control panel was a problem.

Solution: The SMC-2 Controller was installed and set for a 20 second acceleration time. This reduced the starting torque and the downtime for repairs on the grinder. In addition, the benefit of the Energy Saver was realized when the motor was running lightly loaded. The SMC-2 Controller meets the same shock and vibration requirements as electromechanical devices, therefore it met the durability requirements.

Chapter 3 SMC PLUS™ Smart Motor Controller

Description

The SMC PLUS™ Smart Motor Controller is a compact, modular, multi-functional solid state controller used in starting standard three-phase squirrel cage induction motors and to control resistive loads. The SMC PLUS product line includes current ranges from 24 - 1000 Amps, 200 to 600V, 50/60 Hz., UL Listed, CSA Approved. This covers applications up to 1000 horsepower. The SMC PLUS Controller is a self-calibrating device. No adjustments are required for changes in line voltages, currents, or frequencies within the rating of the controller.

Figure 3.1
SMC PLUS Controller (24 - 1000 Amps)

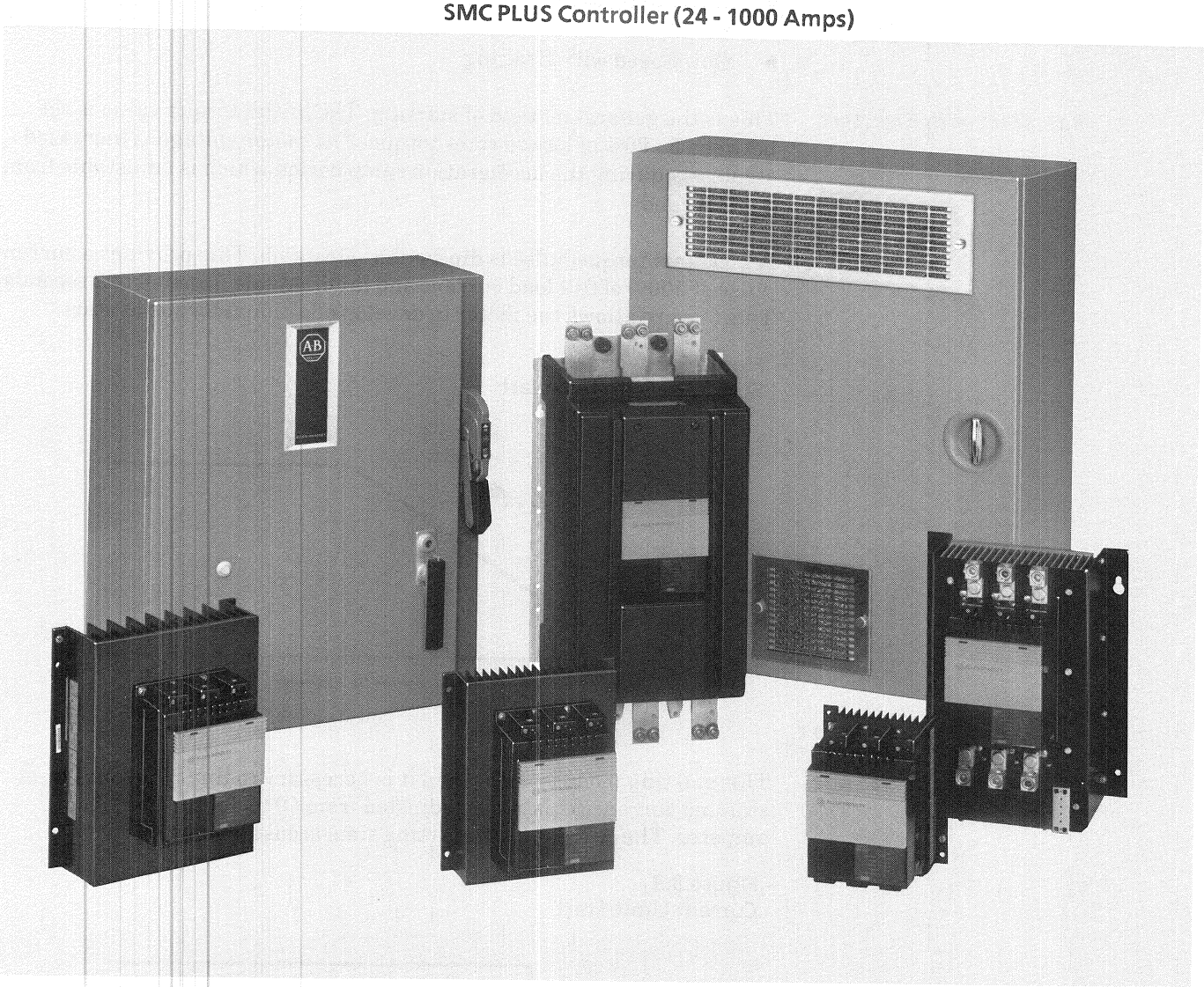

Modes of Operation

The following starting modes are standard within the unit:

- Soft Start with Kickstart
- Current Limit Start
- Full Voltage Start

The built-in energy saver feature allows the controller to conserve energy on applications where the motor is lightly loaded or unloaded for long periods of time.

Optional features:

- Soft Stop
- Pump Control
- Preset Slow Speed
- SMB Smart Motor Brake
- Accu-Stop
- Slow Speed with Braking

Soft Start with Kickstart

This is the general method of starting. The initial torque value is set between 5 - 90% of locked rotor torque. The motor voltage is increased steplessly during the acceleration ramp period which is adjustable from 2 - 30 seconds.

A kickstart torque pulse is dip switch selectable. This provides a current pulse of 500% of full load current and is adjustable from 0.4 to 2 seconds. This feature allows the motor to develop additional torque at start.

Figure 3.2
Soft Start with Kickstart

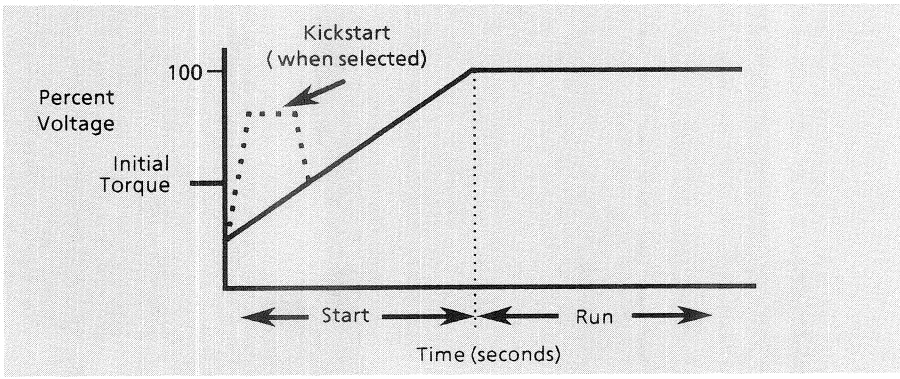

Current Limit Start

This starting mode is used when it is necessary to limit the maximum starting current. This can be adjusted from 50 to 500% of full load amperes. The current limit starting time is customer set.

Figure 3.3
Current Limit Start

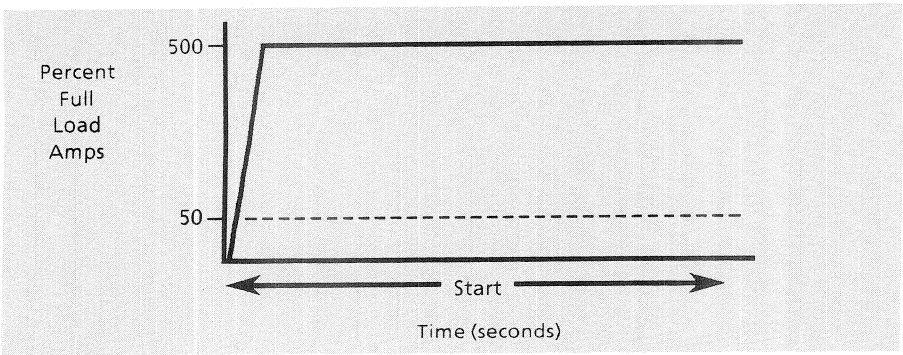

Modes of Operation (continued)

Full Voltage Start

This mode is used in applications requiring across the line starting. The ramp time is less than 1/4 second.

Figure 3.4
Full Voltage Start

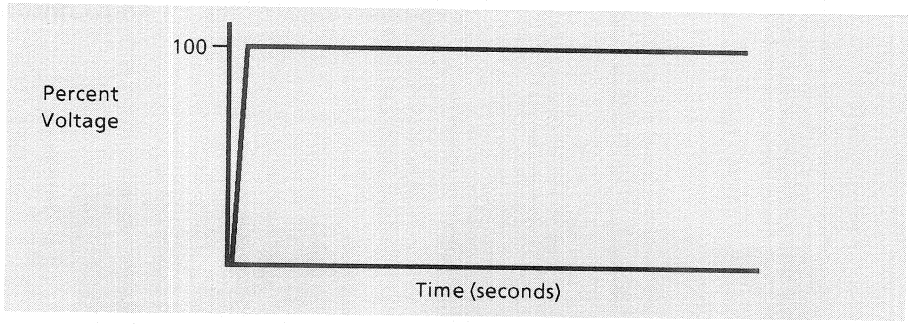

Features

LEDs

In addition to digital adjustments, the SMC PLUS Controller also offers advisory LEDs. They indicate:

- Energy Saver Active
- Stopping Mode
- Starting Mode
- Running Mode
- Control Voltage Present

The SMC PLUS Controller monitors both prestart and running modes. If the controller senses a fault, the SMC PLUS Controller shuts down the motor and illuminates the appropriate fault indicators. The controller monitors the following conditions:

- Start Fault
- Stalled Motor
- Temperature Fault
- Line Fault

Any fault condition will cause the auxiliary contacts to change state and the hold in circuit to release.

Auxiliary Contacts

Also built into the SMC PLUS Controller are auxiliary contacts (1 N.O. - 1 N.C. Form C). These can be configured as either instantaneous contacts or up to speed contacts.

Features (continued)

Modular Design

The SMC PLUS Controller packaging is designed for industrial environments. The modularity of control and power modules feature plug-in functionality – no gate wires to remove or soldering required. Common control modules reduce inventory requirements.

Figure 3.5
Exploded View of the 24 Amp Controller

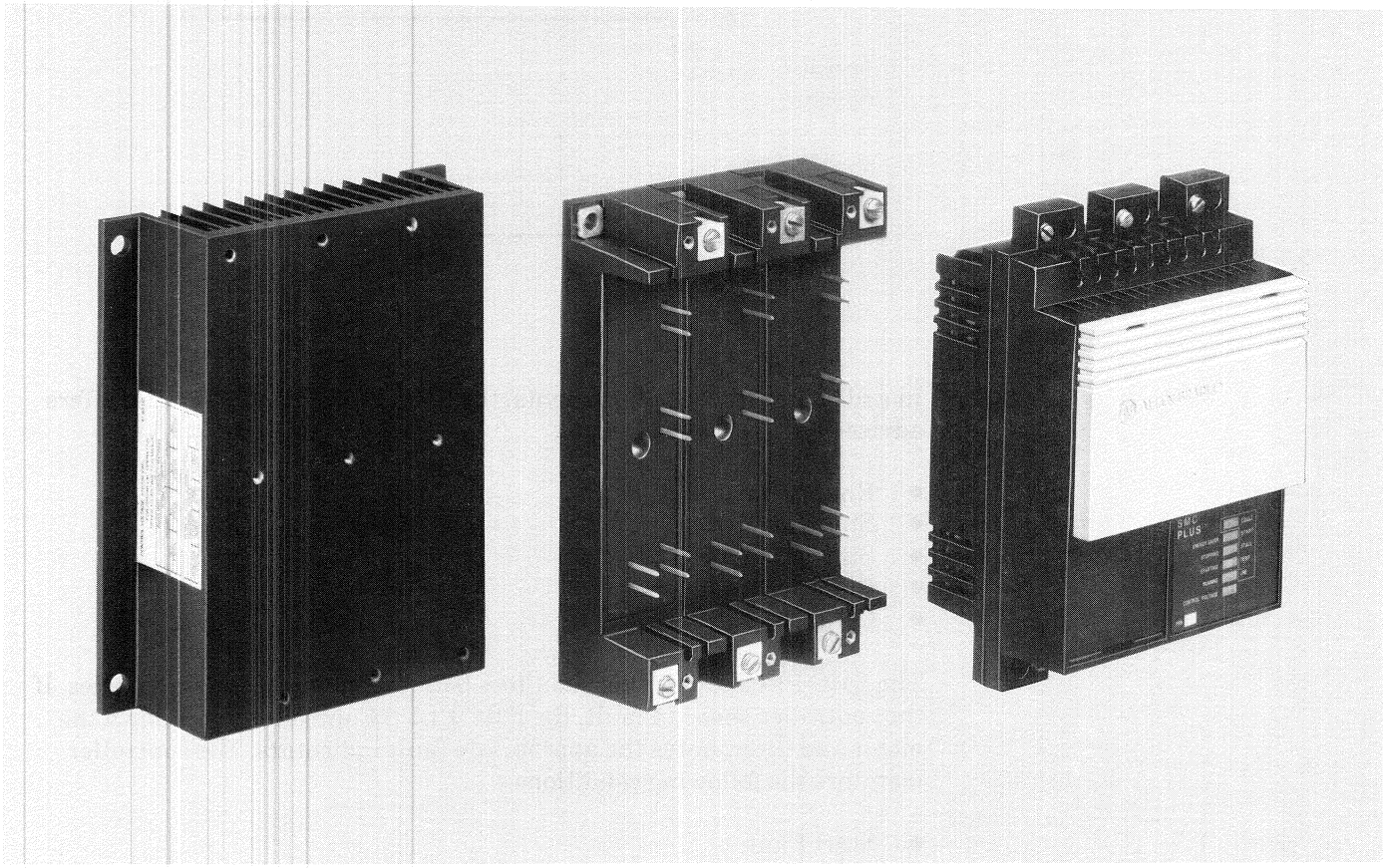

Adjustments

Figure 3.6
Set-up Procedure for Soft Start (without Options)

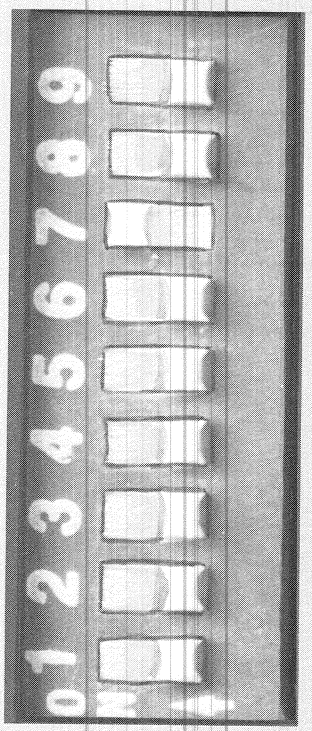

Starting Time

Starting Time

Starting Time

Current Limit /Soft Start Select

Energy Saver Select (On/Off)

Auxiliary Contact Select Up to Speed/Normal

Stall Trip Select (On/Off)

Not Used

Not Used

Switch Number	TIME (seconds)					
	2	5	10	20	25	30
9	ON	Off	ON	Off	ON	Off
8	Off	ON	ON	Off	Off	ON
7	Off	Off	Off	ON	ON	ON
6	Off					
5	ENERGY SAVER SELECT					
4	AUXILIARY CONTACT SELECT					
3	STALL SELECT					
2	NOT USED					
1	NOT USED					

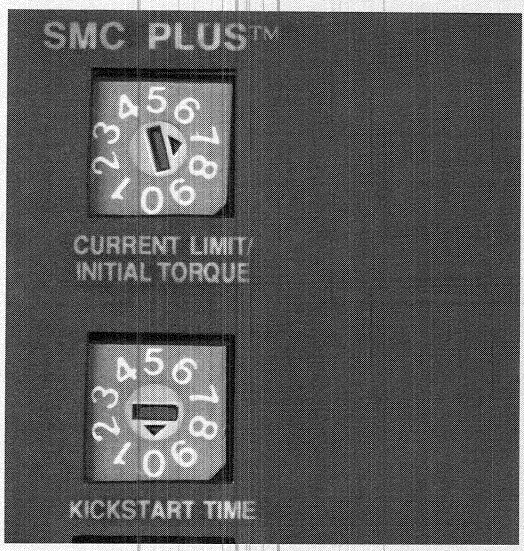

Kickstart Time

Position	0	1	2	3	4	5	6	7	8	9
Time (Sec.)	Off	.4	.6	.8	1.0	1.2	1.4	1.6	1.8	2.0

Initial Torque

Position	0	1	2	3	4	5	6	7	8	9
% of Locked Rotor Torque	5	10	20	30	40	50	60	70	80	90

Typical Connection

Figure 3.7
Typical Connection Diagram

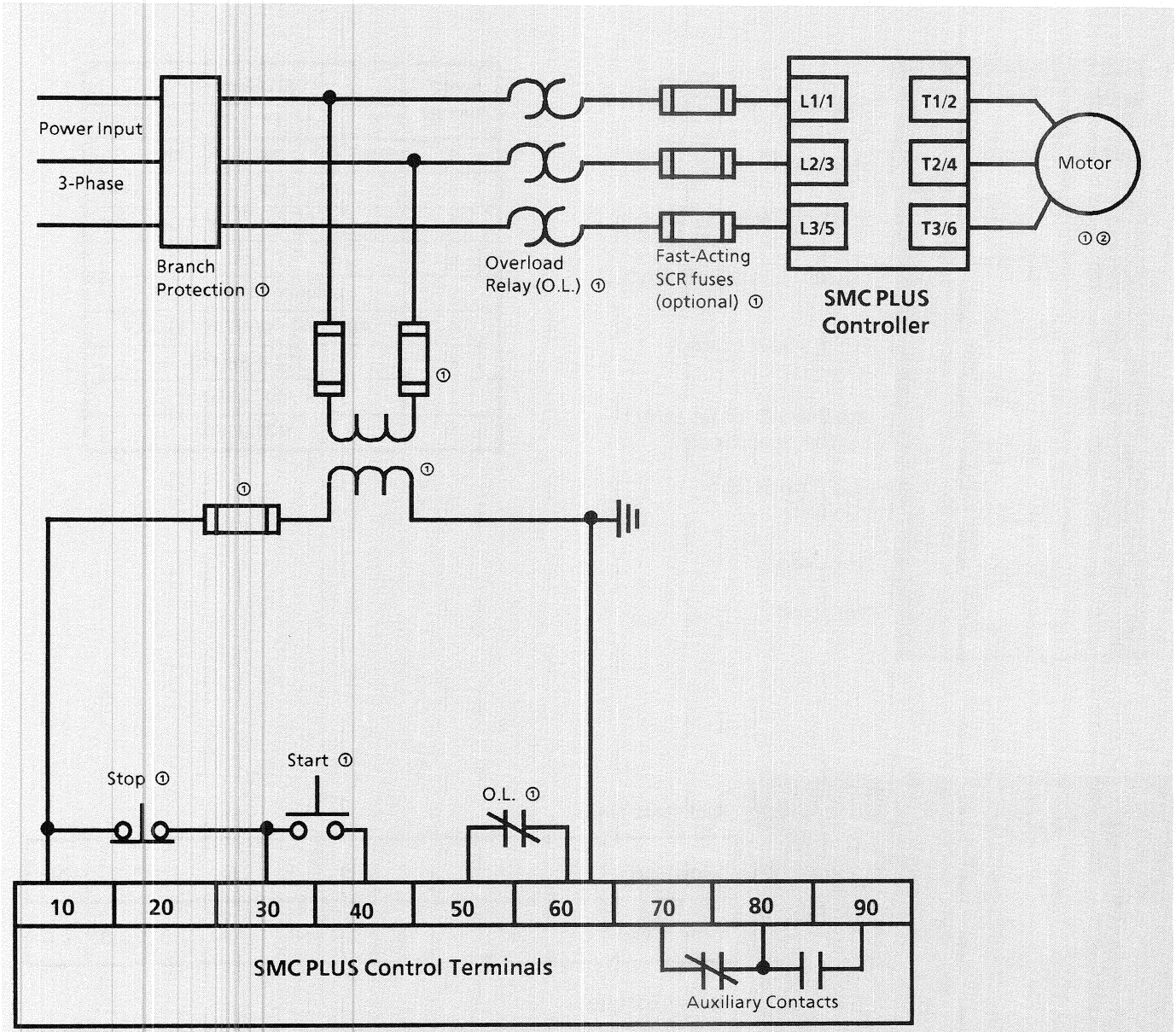

NOTE: For two wire control, remove "STOP-START" push buttons and connect two wire device between terminals 10 and 40.

① Customer Supplied

② Disconnect main power before servicing motor controller or associated wiring. Hazardous voltages are present in the motor circuit even when the solid-state controller is off.

Typical Connection for Retrofit Applications

Figure 3.8
Typical Connection Diagram for Retrofit Applications

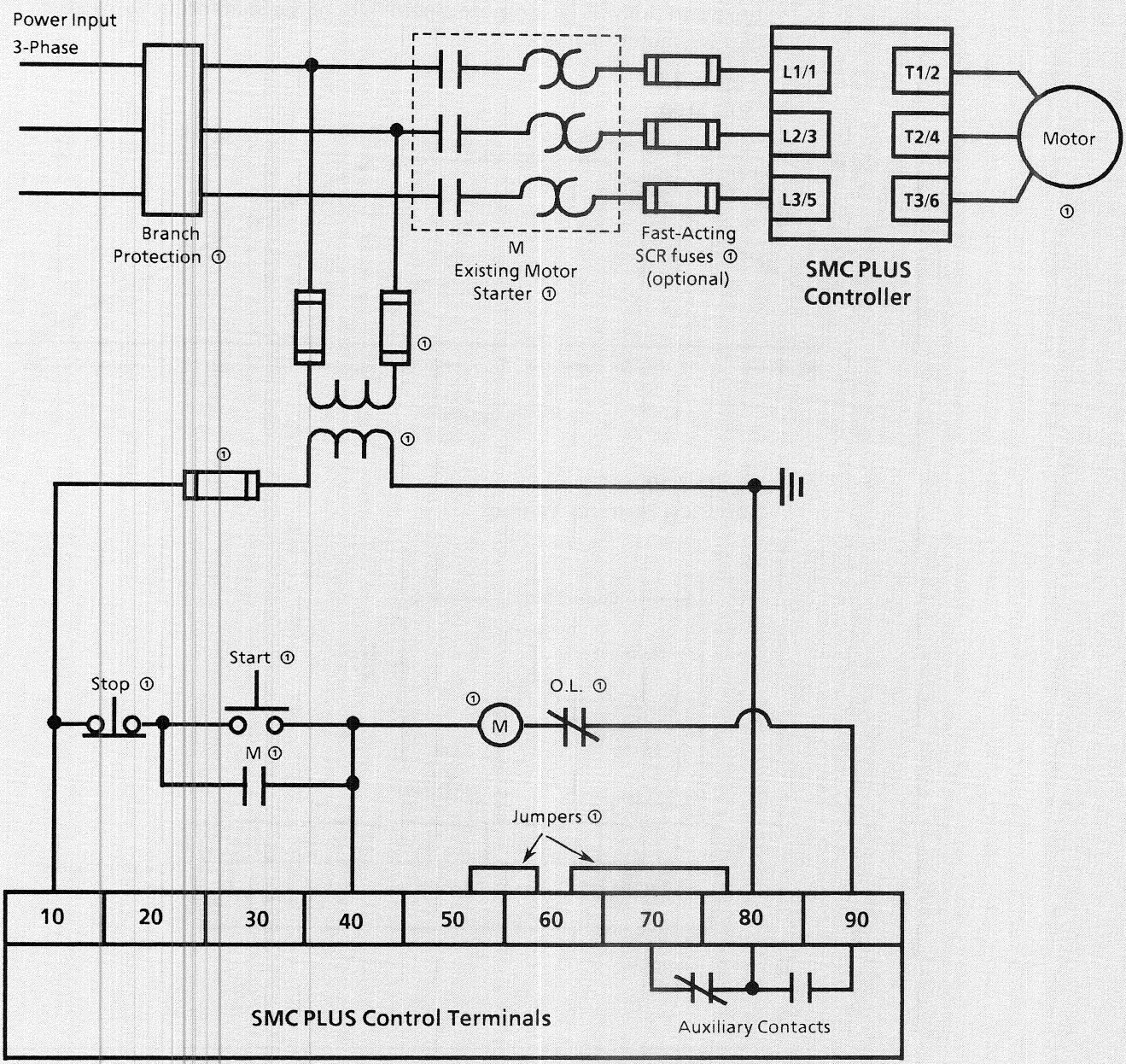

NOTE: For two wire control, remove "START-STOP" push buttons and connect two wire device between terminals 10 and 40.
① Customer Supplied.

Options

Soft Stop Option

This function can be used in applications that require an extended coast to rest. The voltage ramp down time can be set from 2 to 60 seconds. The starting and stopping times are independently adjusted. The load will stop when the voltage drops to a point where the load torque is greater than the motor torque.

Figure 3.9
Soft Stop

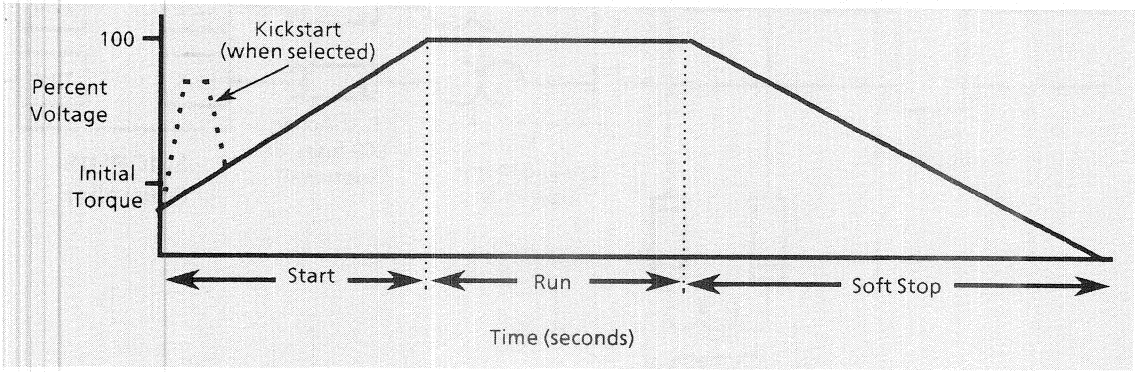

Figure 3.10
Soft Stop Terminal Wiring

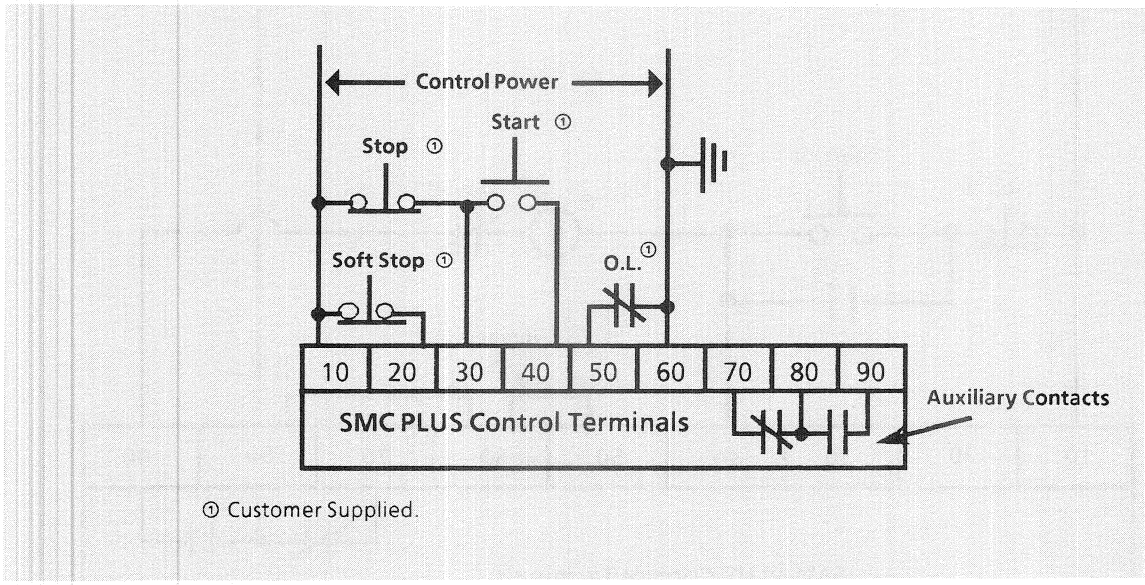

WARNING: Soft Stop is not intended to be used as an emergency stop. Refer to the applicable standards for emergency stop requirements.

Options (continued)

Soft Start Selection with Soft Stop Option

Figure 3.11
Set Up Procedures - Soft Start Selection with Soft Stop Option

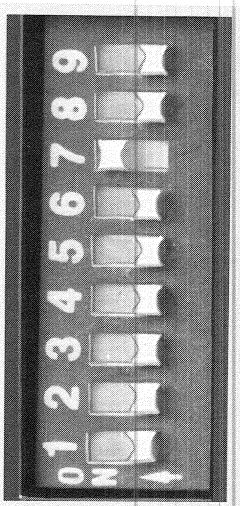

Starting Time
Starting Time
Starting Time
Current Limit /Soft Start Select
Energy Saver Select (On/Off)
Auxiliary Contact Select (Up-to-Speed/Normal)
Stall Trip Select (On/Off)
Not Used
Not Used

EXAMPLE: Above DIP switch is set for 20 second ramp.

Soft Stop Sequence of Operation

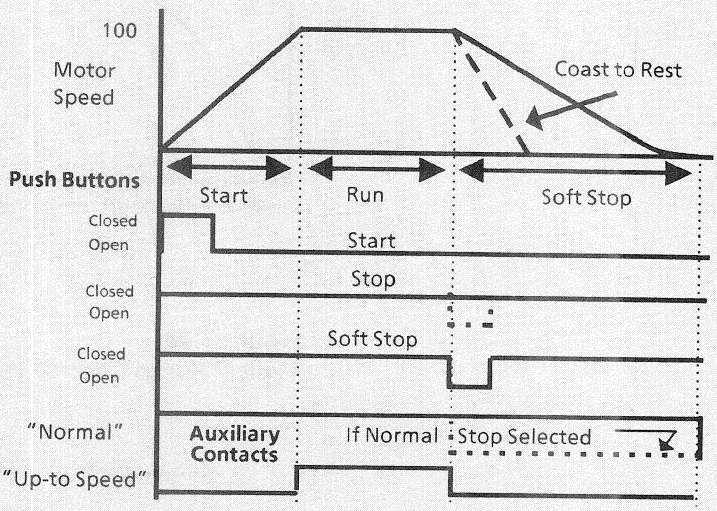

Switch Number	TIME (seconds)					
	2	5	10	20	25	30
9	**ON**	Off	**ON**	Off	**ON**	Off
8	Off	**ON**	**ON**	Off	Off	**ON**
7	Off	Off	Off	**ON**	**ON**	**ON**
6	Off					
5	ENERGY SAVER SELECT					
4	AUXILIARY CONTACT SELECT					
3	STALL SELECT					
2	NOT USED					
1	NOT USED					

WARNING: The user has the ultimate responsibility to determine which stopping mode is best suited to the application and will meet applicable standards for operator safety on a particular machine.

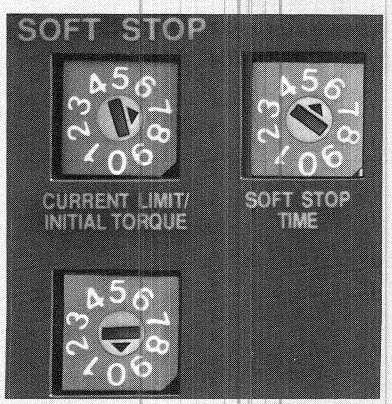

Kickstart Time

Position	0	1	2	3	4	5	6	7	8	9
Time (seconds)	Off	.4	.6	.8	1.0	1.2	1.4	1.6	1.8	2.0

Initial Torque

Position	0	1	2	3	4	5	6	7	8	9
%of Locked Rotor Torque	5	10	20	30	40	50	60	70	80	90

Soft Stop Time

Position	0	1	2	3	4	5	6	7	8	9
Time (seconds)	Off	2	5	10	20	25	30	40	50	60

Options (continued)

Pump Control Option

This function is used to reduce surges in a pumping system during the starting and stopping of centrifugal pumps. The SMC PLUS controls the speed of the motor during starting and stopping without feedback devices.

Figure 3.12
Pump Control

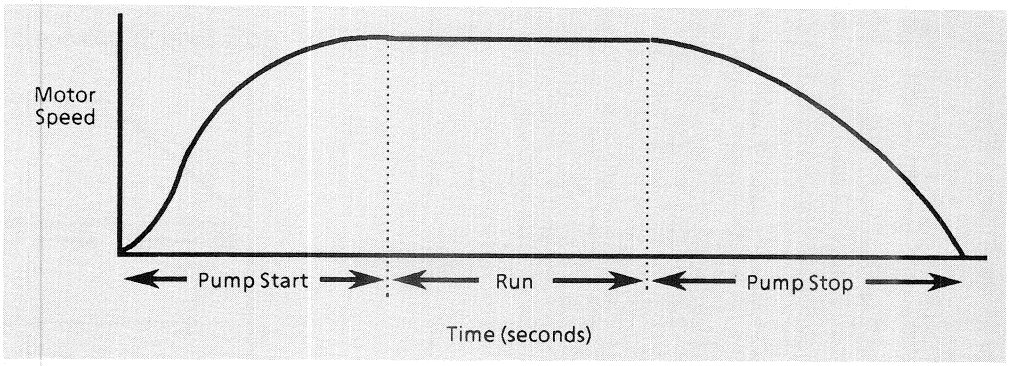

Figure 3.13
Typical Pump Control Terminal Wiring

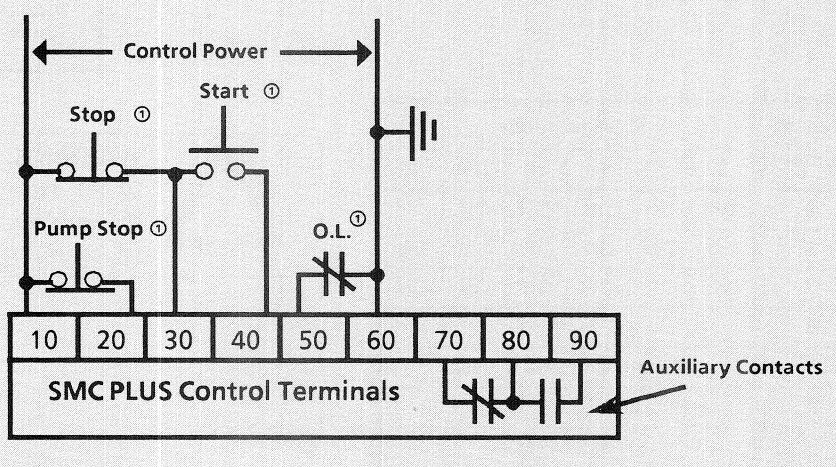

① Customer Supplied.

WARNING: Pump Stop is not intended to be used as an emergency stop. Refer to the applicable standards for emergency stop requirements.

Options (continued)

Pump Control with Starting and Stopping Option

Figure 3.14
Set Up Procedures - Pump Control Starting and Stopping

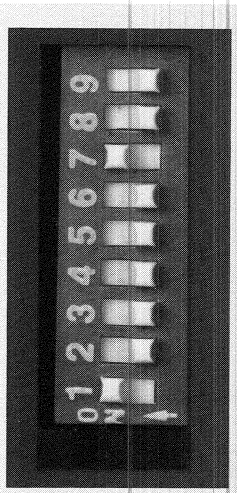

Starting Time
Starting Time
Starting Time
Current Limit /Soft Start Select
Energy Saver Select (On/Off)
Auxiliary Contact Select (Up-to-Speed/Normal)
Stall Trip Select (On/Off)
Stop Time Select (X2/X)
Pump Start Select (On/Off)

EXAMPLE: Above DIP switch is set for 20 second Pump Start.

Pump Control Sequence of Operation

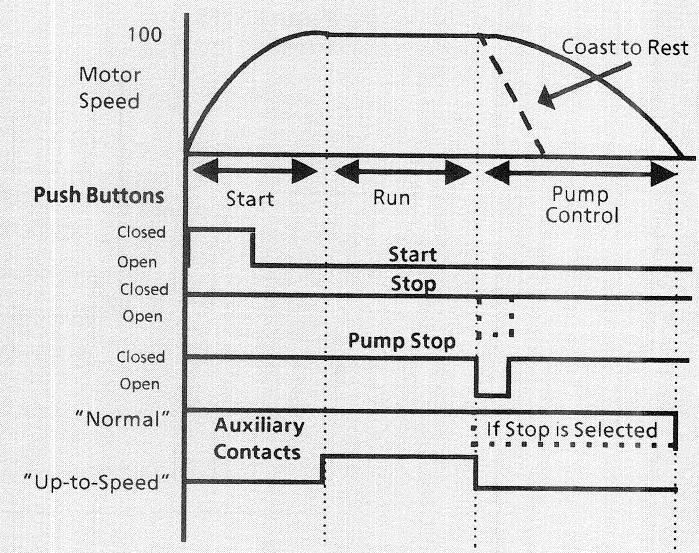

Switch Number	TIME (seconds)					
	2	5	10	20	25	30
9	**ON**	Off	**ON**	Off	**ON**	Off
8	Off	**ON**	**ON**	Off	Off	**ON**
7	Off	Off	Off	**ON**	**ON**	**ON**
6	Off					
5	ENERGY SAVER SELECT					
4	AUXILIARY CONTACT SELECT					
3	STALL SELECT					
2	STOP TIME SELECT					
1	PUMP START SELECT					

WARNING: The user has the ultimate responsibility to determine which stopping mode is best suited to the application and will meet applicable standards for operator safety on a particular machine.

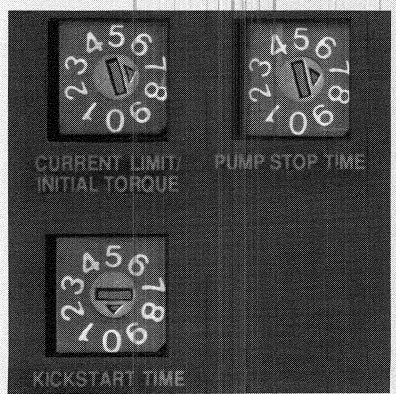

EXAMPLE: Pump Stop Time rotary digital switch is set to 40 seconds.

Initial Torque

Position	0	1	2	3	4	5	6	7	8	9
%of Locked Rotor Torque	5	10	20	30	40	50	60	70	80	90

Kickstart Time

Position	0	1	2	3	4	5	6	7	8	9
Time (seconds)	Off	.4	.6	.8	1.0	1.2	1.4	1.6	1.8	2.0

Pump Stop Time

Position	0	1	2	3	4	5	6	7	8	9
Time (seconds)	Off	2	5	10	20	25	30	40	50	60

Options (continued)

Preset Slow Speed Option

This function can be used in applications that require a slow speed for positioning material. The preset slow speed can be set by a DIP switch for either LOW (7% of base speed) or HIGH (15% of base speed). Reversing is possible by selecting a DIP switch. Speeds provided during reverse operation are LOW (10% of base speed) or HIGH (20% of base speed).

Figure 3.15
Preset Slow Speed

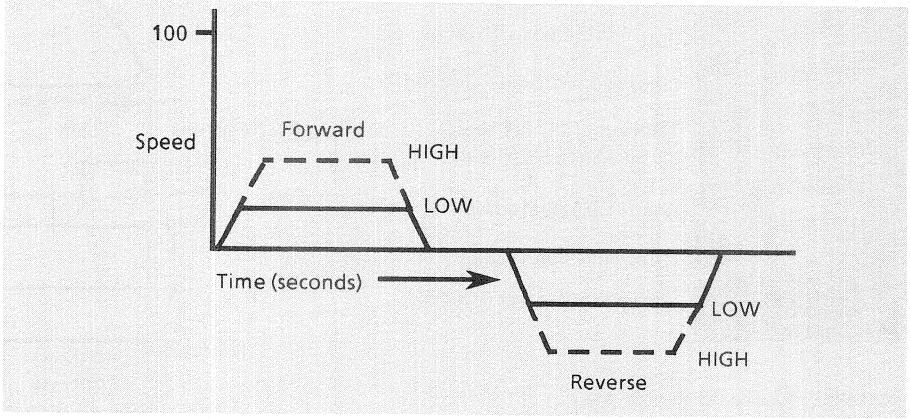

CAUTION: Slow speed running is not intended for continuous operation due to reduced motor cooling.

Figure 3.16
Preset Slow Speed Terminal Wiring

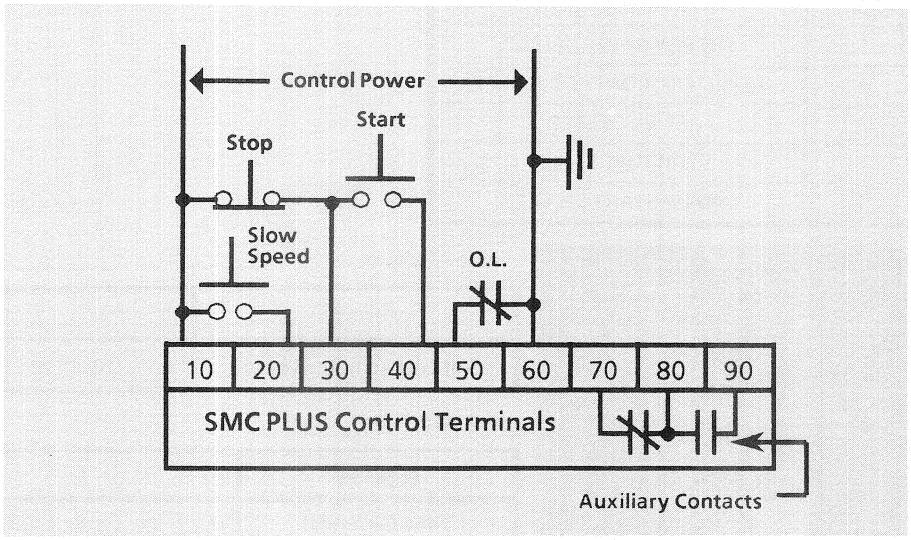

Options (continued)

Soft Start Selection with Preset Slow Speed Option

Figure 3.17
Set Up Procedures - Soft Start Selection with Preset Slow Speed Option

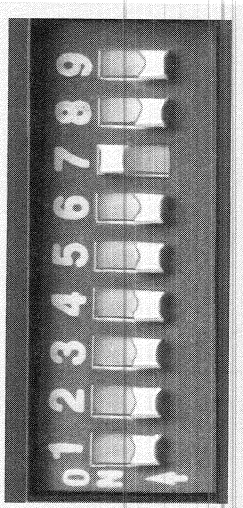

Starting Time
Starting Time
Starting Time
Current Limit /Soft Start Select
Energy Saver Select (On/Off)
Auxiliary Contact Select (Up-to-Speed/Normal)
Stall Trip Select (On/Off)
Reverse/Forward Select
Slow Speed Select (Low/High)

EXAMPLE: Above DIP switch is set for 20 second ramp.

Switch Number	TIME (seconds)					
	2	5	10	20	25	30
9	**ON**	Off	**ON**	Off	**ON**	Off
8	Off	**ON**	**ON**	Off	Off	**ON**
7	Off	Off	Off	**ON**	**ON**	**ON**
6	Off					
5	ENERGY SAVER SELECT					
4	AUXILIARY CONTACT SELECT					
3	STALL SELECT					
2	REVERSE/FORWARD SELECT					
1	SLOW SPEED SELECT (LOW/HIGH)					

Preset Slow Speed Sequence of Operation

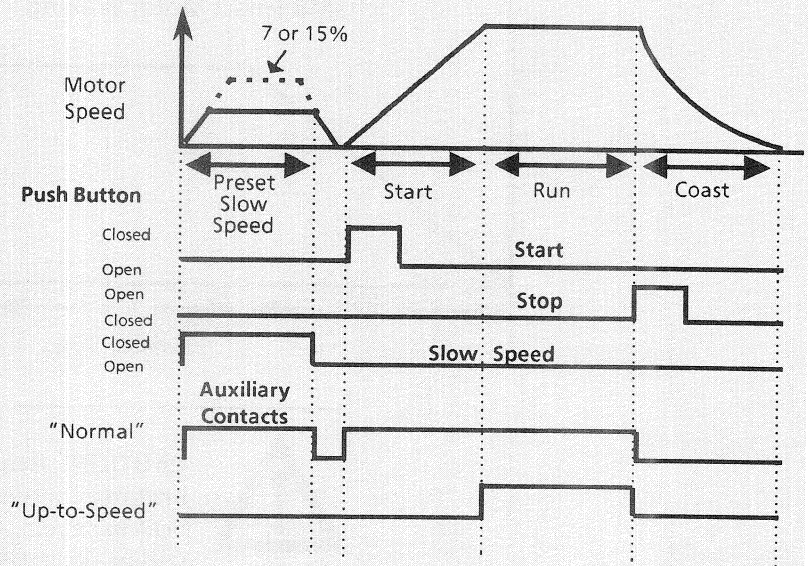

WARNING: The user has the ultimate responsibility to determine which stopping mode is best suited to the application and will meet applicable standards for operator safety on a particular machine.

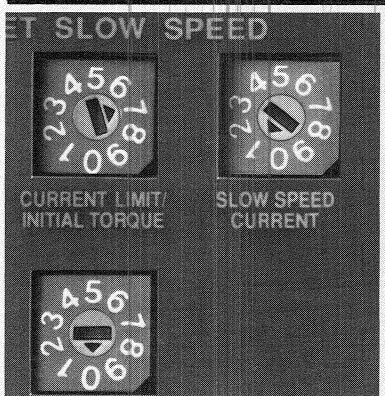

EXAMPLE: Slow Speed Current rotary digital switch is set to 50% of full load current.

Kickstart Time

Position	0	1	2	3	4	5	6	7	8	9
Time (seconds)	Off	.4	.6	.8	1.0	1.2	1.4	1.6	1.8	2.0

Initial Torque

Position	0	1	2	3	4	5	6	7	8	9
% of Locked Rotor Torque	5	10	20	30	40	50	60	70	80	90

Slow Speed Current

Position	0	1	2	3	4	5	6	7	8	9
% of Full Load Current	Off	50	100	150	200	250	300	350	400	450

Options (continued)

SMB™ Smart Motor Braking Option

This function provides motor braking for applications which require the motor to stop quickly. It is a microcomputer based braking system which applies three phase braking current to a standard squirrel cage induction motor. The strength of the braking current is adjustable from 150% to 400% of full load current.

Figure 3.18
SMB Smart Motor Braking

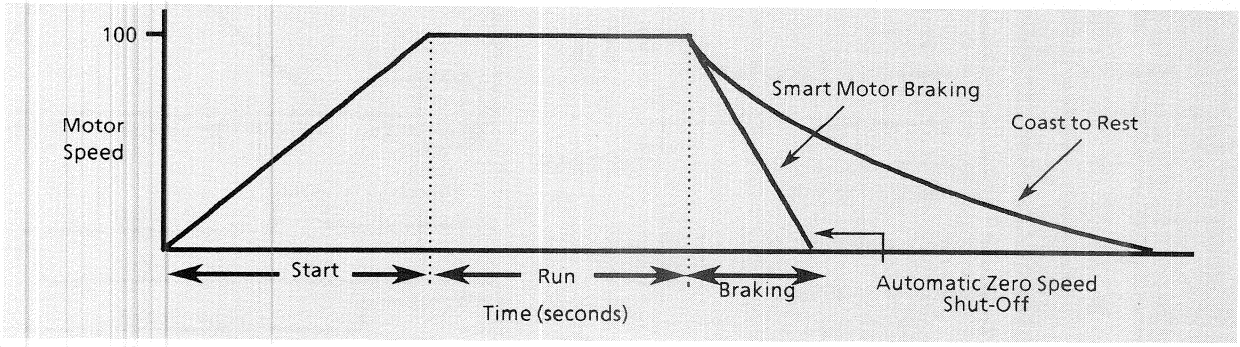

CAUTION: Braking may cause motor heating depending on braking current, frequency of braking and duration of braking cycle. Select the lowest brake current setting that will brake satisfactorily.

Figure 3.19
Soft Stop Terminal Wiring

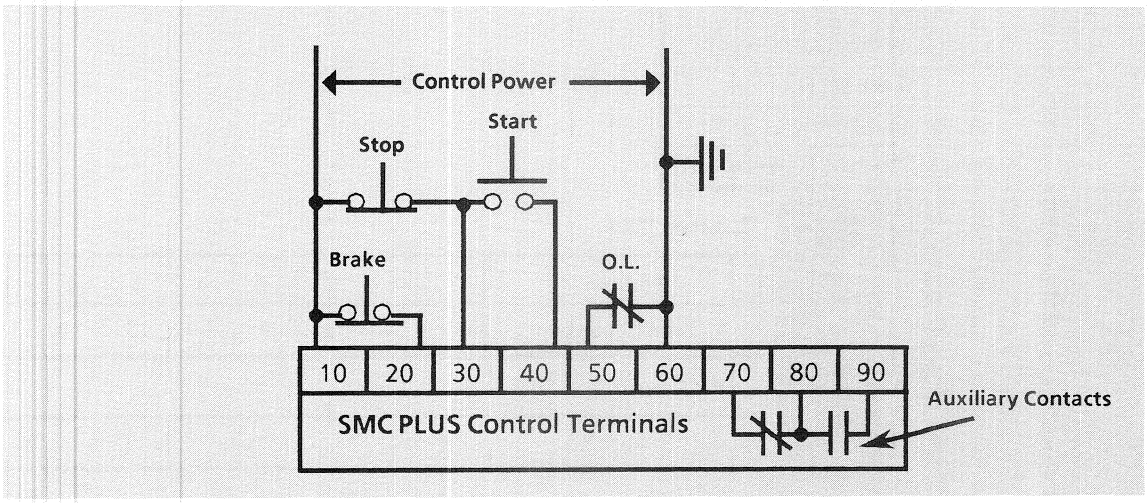

WARNING: SMB Smart Motor Brake is not intended to be used as an emergency stop. Refer to the applicable standards for emergency stop requirements.

Options (continued)

Soft Start Selection with SMB Braking Option

Figure 3.20
Set Up Procedures - Soft Start Selection with SMB Braking Option

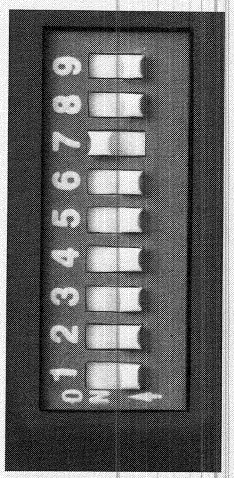

Starting Time
Starting Time
Starting Time
Current Limit /Soft Start Select
Energy Saver Select (On/Off)
Auxiliary Contact Select (Up-to-Speed/Normal)
Stall Trip Select (On/Off)
Not Used
Not Used

EXAMPLE: Above DIP switch is set for 20 second ramp.

Switch Number	TIME (seconds)					
	2	5	10	20	25	30
9	**ON**	Off	**ON**	Off	**ON**	Off
8	Off	**ON**	**ON**	Off	Off	**ON**
7	Off	Off	Off	**ON**	**ON**	**ON**
6	Off					
5	ENERGY SAVER SELECT					
4	AUXILIARY CONTACT SELECT					
3	STALL SELECT					
2	NOT USED					
1	NOT USED					

SMB Smart Motor Braking Sequence of Operation

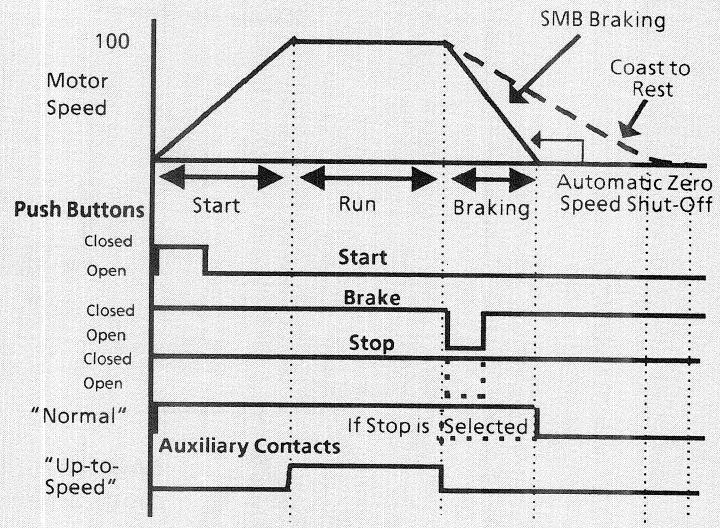

WARNING: The user has the ultimate responsibility to determine which stopping mode is best suited to the application and will meet applicable standards for operator safety on a particular machine.

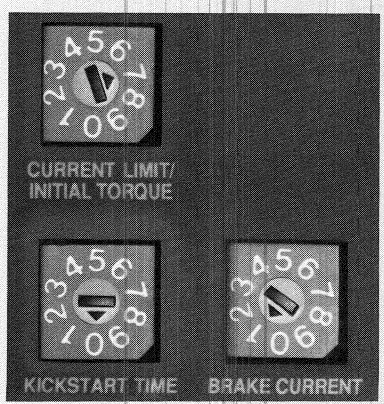

EXAMPLE: Brake Current rotary digital switch is set to 150% of full load current.

Kickstart Time

Position	0	1	2	3	4	5	6	7	8	9
Time (seconds)	Off	.4	.6	.8	1.0	1.2	1.4	1.6	1.8	2.0

Initial Torque

Position	0	1	2	3	4	5	6	7	8	9
%of Locked Rotor Torque	5	10	20	30	40	50	60	70	80	90

Brake Current

Position	0	1	2	3	4	5	6	7	8	9
% of Full Load Current	Off	150	175	200	225	250	275	300	350	400

Options (continued)

Accu-Stop™ Option

This function combines smart motor braking and preset slow speed. The Accu-Stop option provides a brake from full speed to a slow speed, and to stop for positioning. Braking current is adjustable from 150% to 400%. Slow speed current is adjustable from 50% to 450% of full load current. Slow speed can be selected for either 7% (LOW) or 15% (HIGH) operation.

Figure 3.21
Accu-Stop Option

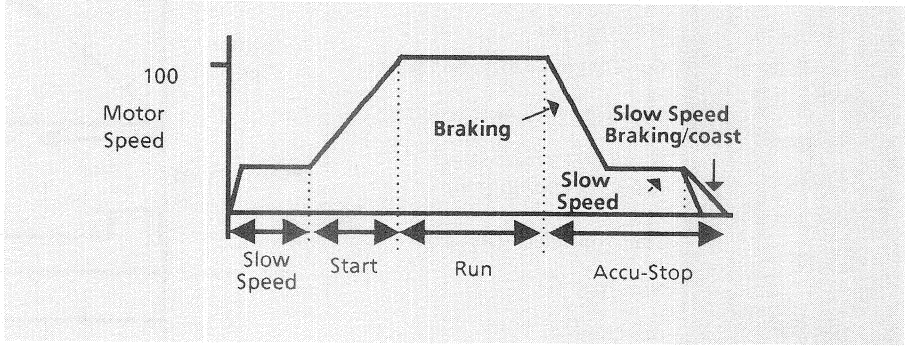

CAUTION: Slow speed running is not intended for continuous operation due to reduced motor cooling.

Figure 3.22
Accu-Stop Terminal Wiring

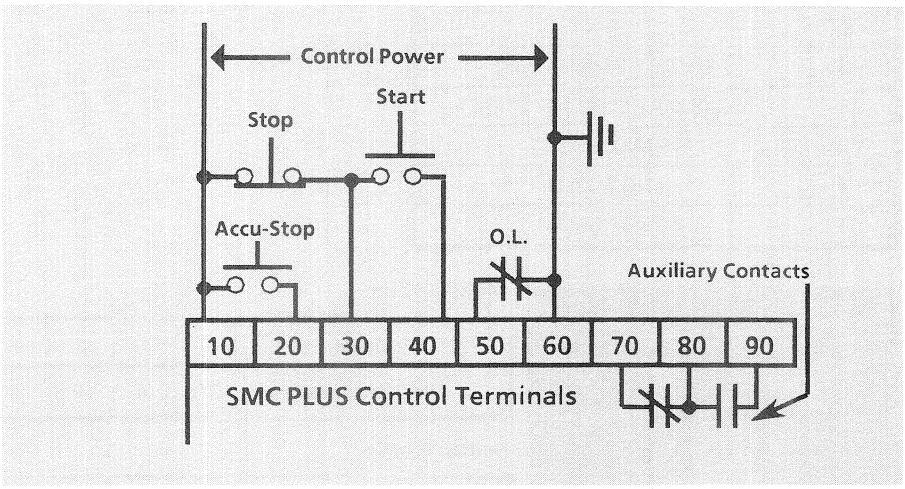

WARNING: The Accu-Stop option is not intended to be used as an emergency stop. Refer to the applicable standards for emergency stop requirements.

Options (continued)

Soft Start Selection with Accu-Stop Option

Figure 3.23
Set Up Procedures - Soft Start Selection with Accu-Stop Option

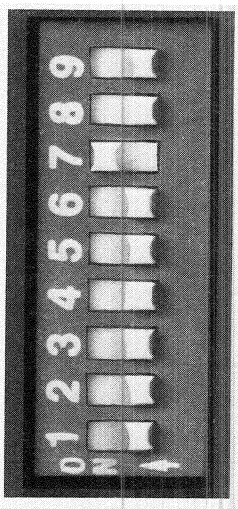

Starting Time
Starting Time
Starting Time
Current Limit /Soft Start Select
Energy Saver Select (On/Off)
Auxiliary Contact Select (Up-to-Speed/Normal)
Stall Trip Select (On/Off)
Slow Speed Start Select (On/Off)
Slow Speed Select (LOW/HIGH)

EXAMPLE: Above DIP switch is set for 20 second ramp.

Switch Number	TIME (seconds)					
	2	5	10	20	25	30
9	**ON**	Off	**ON**	Off	**ON**	Off
8	Off	**ON**	**ON**	Off	Off	**ON**
7	Off	Off	Off	**ON**	**ON**	**ON**
6	Off					
5	ENERGY SAVER SELECT					
4	AUXILIARY CONTACT SELECT					
3	STALL SELECT					
2	SLOW SPEED START SELECT					
1	SLOW SPEED SELECT (LOW/HIGH)					

Accu-Stop Sequence of Operation

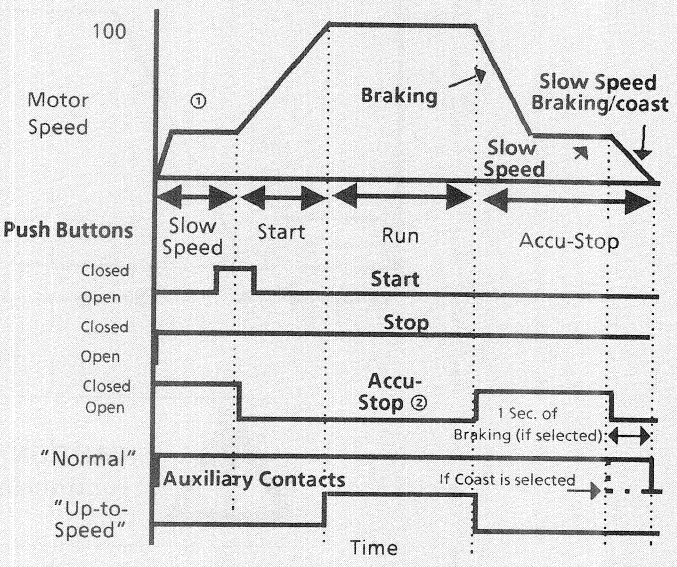

① Slow Speed Start Select "ON".
② When Accu-Stop push button is closed, start/stop function is disabled.

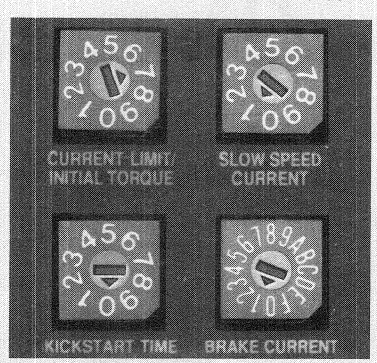

EXAMPLE: Slow Speed Current rotary digital switch is set to 50% and Brake Current rotary digital switch is set at 175%, with coast from slow speed.

Kickstart Time

Position	0	1	2	3	4	5	6	7	8	9
Time (seconds)	Off	.4	.6	.8	1.0	1.2	1.4	1.6	1.8	2.0

Initial Torque

Position	0	1	2	3	4	5	6	7	8	9
%of Locked Rotor Torque	5	10	20	30	40	50	60	70	80	90

Slow Speed Current

Position	0	1	2	3	4	5	6	7	8	9
%of Full Load Current	Off	50	100	150	200	250	300	350	400	450

	Brake Current and Slow Speed Coast								Brake Current and Slow Speed Brake							
Position	0	1	2	3	4	5	6	7	8	9	A	B	C	D	E	F
%of Locked Rotor Current	150	170	200	225	250	300	350	400	150	175	200	225	250	300	350	400

Options (continued)

Slow Speed with Braking Option

This function combines smart motor braking and preset slow speed for applications that require slow set-up speeds and braking to a stop.

Figure 3.24
Slow Speed with Braking

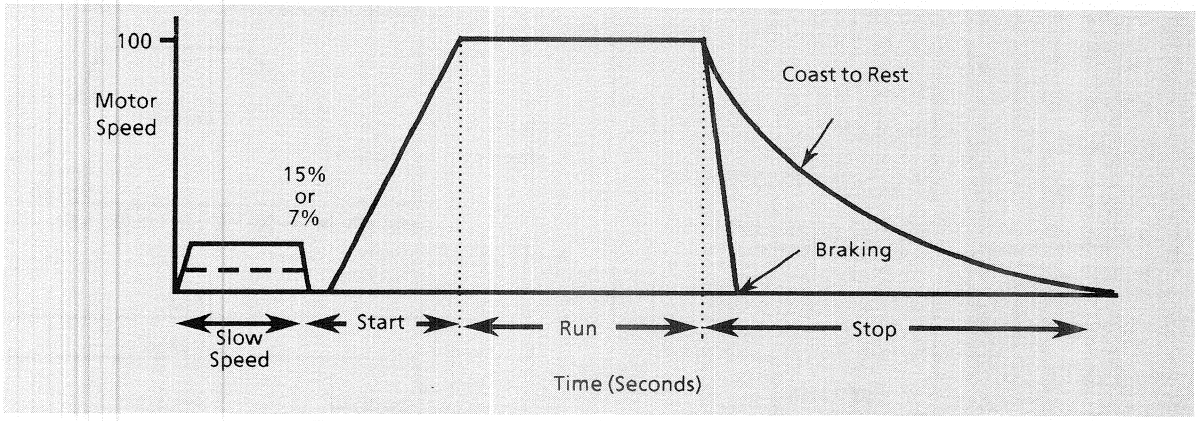

CAUTION: Slow speed running is not intended for continuous operation due to reduced motor cooling.

CAUTION: Braking may cause motor heating depending on braking current, frequency of braking and duration of braking cycle. Select the lowest brake current setting that will brake satisfactorily.

Figure 3.25
Slow Speed with Braking Terminal Wiring

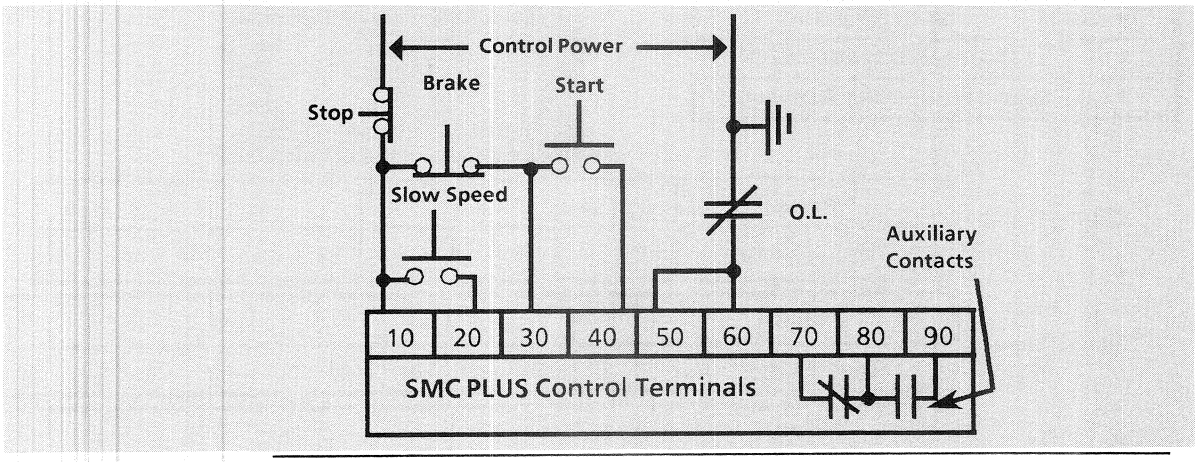

WARNING: The Slow Speed with Braking option is not intended to be used as an emergency stop. Refer to the applicable standards for emergency stop requirements.

Options (continued)

Soft Start Selection with Slow Speed with Braking Option

Figure 3.26
Set Up Procedures - Soft Start with Slow Speed with Braking Option

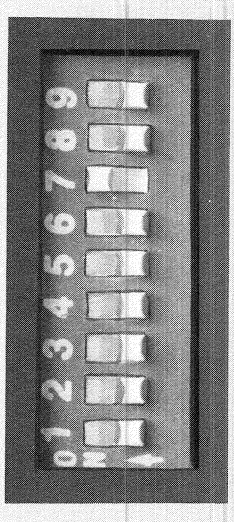

Starting Time
Starting Time
Starting Time
Current Limit /Soft Start Select
Energy Saver Select (On/Off)
Auxiliary Contact Select (Up-to-Speed/Normal)
Stall Trip Select (On/Off)
Off
Slow Speed Select (LOW/HIGH)

EXAMPLE: Above DIP switch is set for 20 second ramp.

Switch Number	TIME (seconds)					
	2	5	10	20	25	30
9	**ON**	Off	**ON**	Off	**ON**	Off
8	Off	**ON**	**ON**	Off	Off	**ON**
7	Off	Off	Off	**ON**	**ON**	**ON**
6	Off					
5	**ENERGY SAVER SELECT**					
4	**AUXILIARY CONTACT SELECT**					
3	**STALL SELECT**					
2	Off					
1	**SLOW SPEED SELECT (LOW/HIGH)**					

Slow Speed with Braking Sequence of Operation

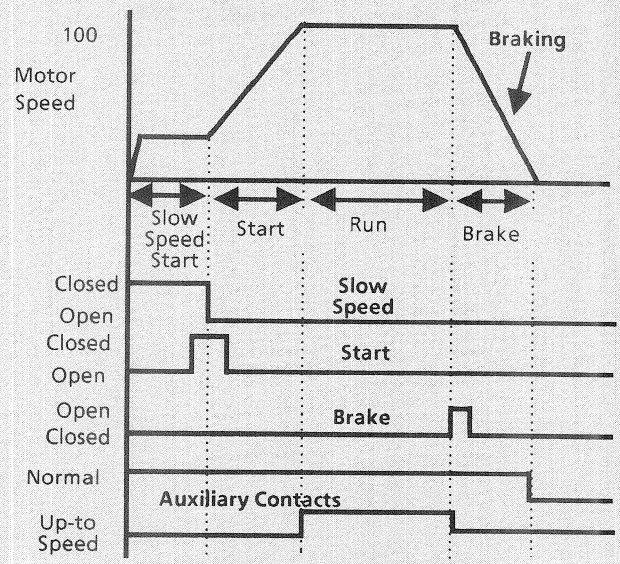

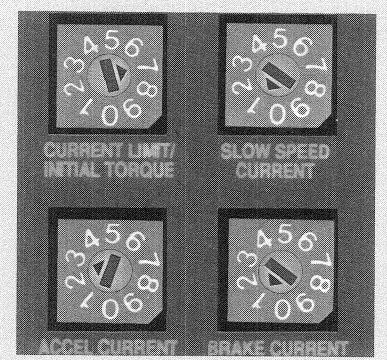

EXAMPLE: Slow Speed Current rotary digital switch is set to 50% of full load current.

Braking Current

Position	0	1	2	3	4	5	6	7	8	9
%of Full Load Current	Off	150	175	200	225	250	275	300	350	400

Initial Torque

Position	0	1	2	3	4	5	6	7	8	9
%of Locked Rotor Torque	5	10	20	30	40	50	60	70	80	90

Slow Speed Running Current

Position	0	1	2	3	4	5	6	7	8	9
%of Full Load Current	Off	50	100	150	200	250	300	350	400	450

Slow Speed Acceleration Current

Position	0	1	2	3	4	5	6	7	8	9
%of Full Load Current	50	100	125	150	175	200	250	300	350	400

Applications

In this section a few of many applications are described, as well as why the particular control method was selected. For example, a tumbler drum is described using a soft start feature. We will then "build" upon this application to describe how the SMC PLUS Controller options can be used to improve the tumbler drum performance and productivity.

Illustrations are included to help identify the particular application. Motor ratings are specified but this may vary in other typical applications.

COMPRESSOR WITH SOFT START

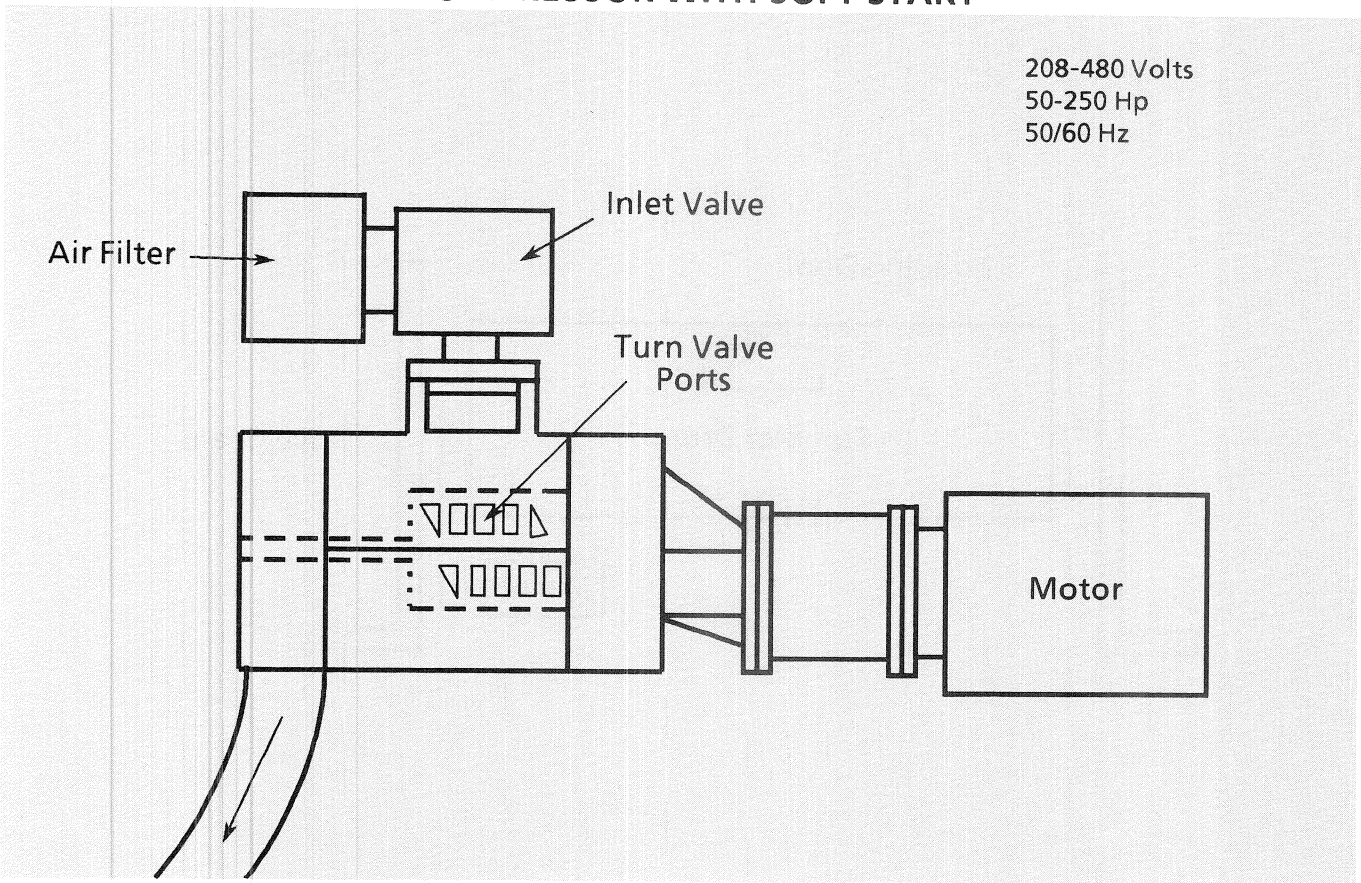

Problem: A compressor OEM shipped its equipment into overseas markets. There were many different voltage and frequency requirements to meet depending the compressor's final destination. Due to power company requirements and mechanical stress on the compressor, a reduced voltage starter was required. Because of the numerous voltages and frequencies, a great variety of controllers were required. This made ordering and stocking of spare parts difficult. Energy savings were also desired as this is typically one of the larger motors in the plant and frequently runs lightly loaded.

Solution: The SMC PLUS Controller was installed and set for a 20 second soft start. This reduced the voltage to the motor during starting to meet the power company requirements. By reducing the voltage the starting torque was also reduced minimizing shock to the compressor while starting. In addition the Energy Saver feature optimized the voltage to the motor while running unloaded. The SMC PLUS Controller minimized the variety of controllers required because of its self-calibration abilities. For example, the unit used at 480V, 60Hz could be used at 380V, 50Hz. This simplified the ordering of the controller and greatly reduced the variety of spare parts.

TUMBLER WITH SOFT START

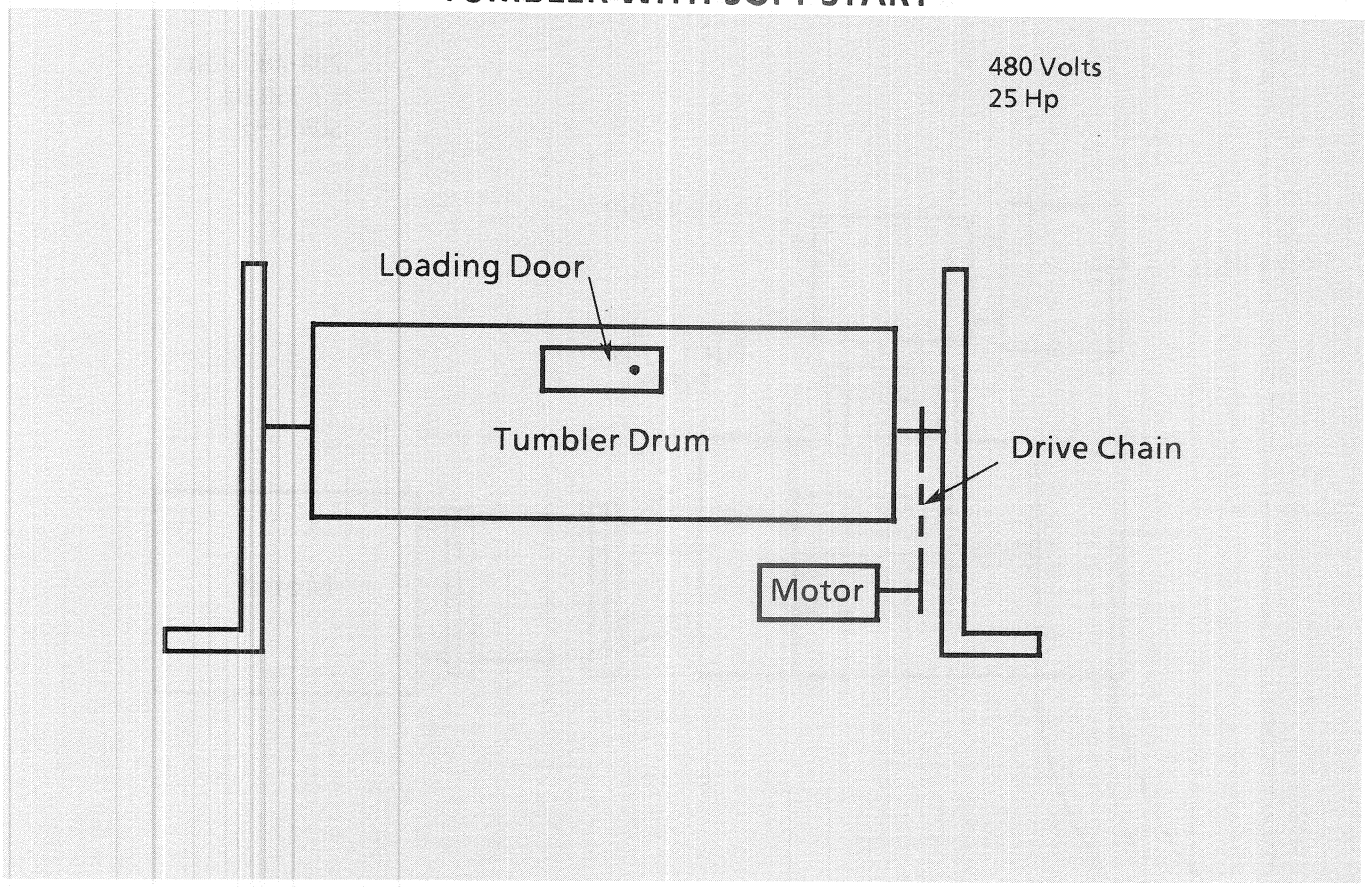

Problem: A tumbler used in a nail finishing process was breaking the drive chain due to the uncontrolled acceleration from the across-the-line start. In addition, a reversing starter was needed to position the drum to the top position for loading the product. Due to lack of controlled acceleration, numerous jogs were used to position the drum. The stopping time was not a concern in this application. In addition, single phasing of the motor was a frequent problem causing premature motor failure.

Solution: The SMC PLUS Controller was installed after the reversing contactor to control the starting torque of the motor. This decreased the snapping of the drive chain on start up which increased the life of the chain and reduced the downtime on the tumbler. In addition, the SMC PLUS Controller made it easier to jog the drum into position for loading and unloading. (The SMC PLUS Controller slowed the acceleration rate to prevent overshoot.) This improved the productivity of the loading and unloading process. The SMC PLUS Controller would quickly detect the phase failure during starting or running. The controller would shut off with a "line fault" condition and prevent restarting until the line had been corrected. This added additional protection to the motor and system.

TUMBLER WITH SOFT START AND SMB™ SMART MOTOR BRAKING OPTION

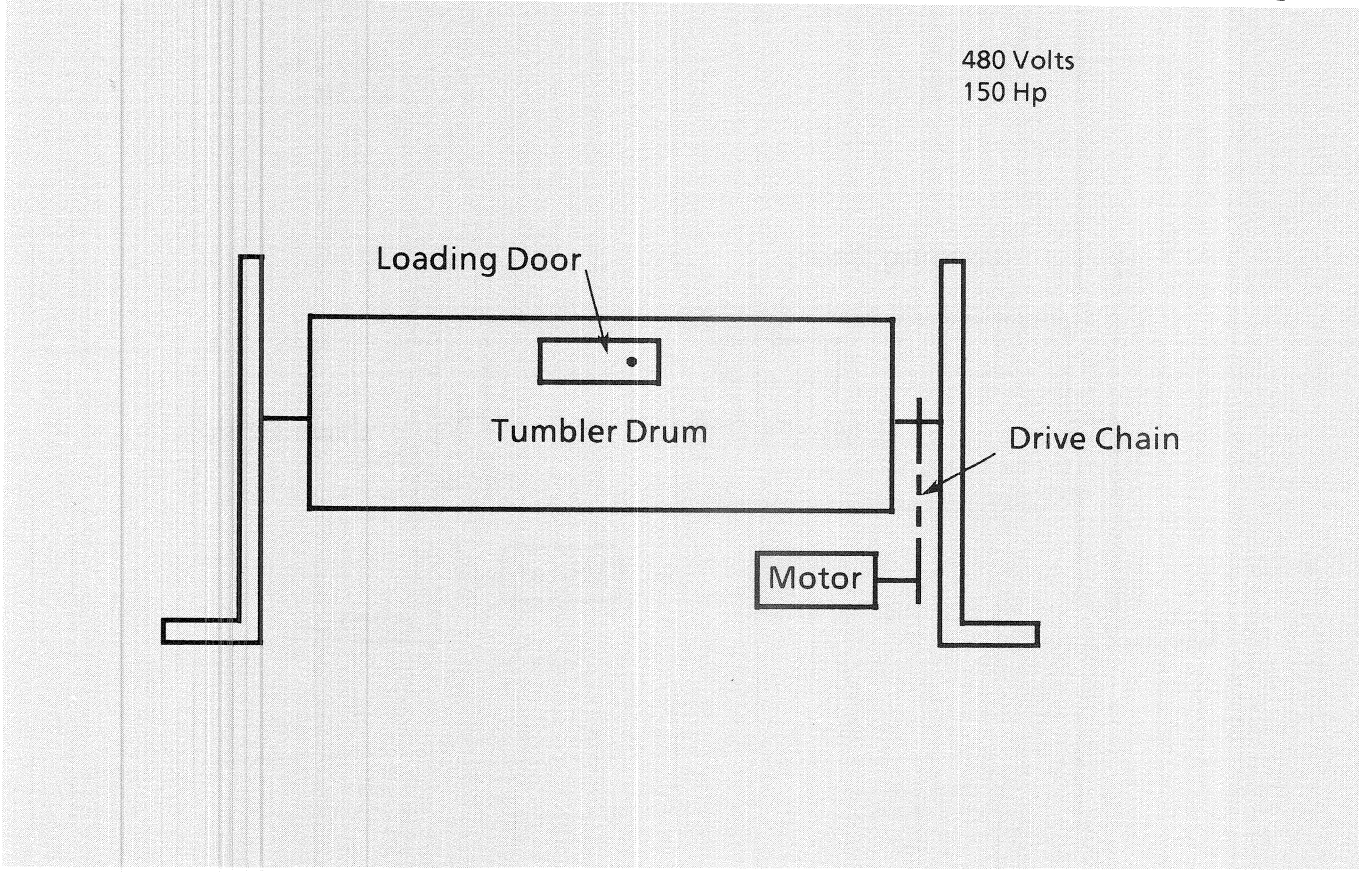

Problem: A tumbler drum used in the de-burring process was breaking the drive chain due to the uncontrolled acceleration from the across-the-line starter. To increase production on the drum, the coasting time on stop had to be reduced. Previous solutions were a separate soft start package plus a motor brake. This required additional panel space and power wiring. A small enclosure size and simplified power wiring to reduce the cost of the controls were needed.

Solution: The SMC PLUS Controller with the SMB Smart Motor Braking option was installed on the process. The soft start provided a smooth acceleration of the drive chain which reduced downtime. The controlled acceleration made positioning for loading/unloading easier. The SMB Smart Motor Braking option allowed the system to be quickly stopped, improving productivity. In addition, the SMB Smart Motor Braking option did not require additional panel space or wiring.

TUMBLER WITH ACCU-STOP™ OPTION

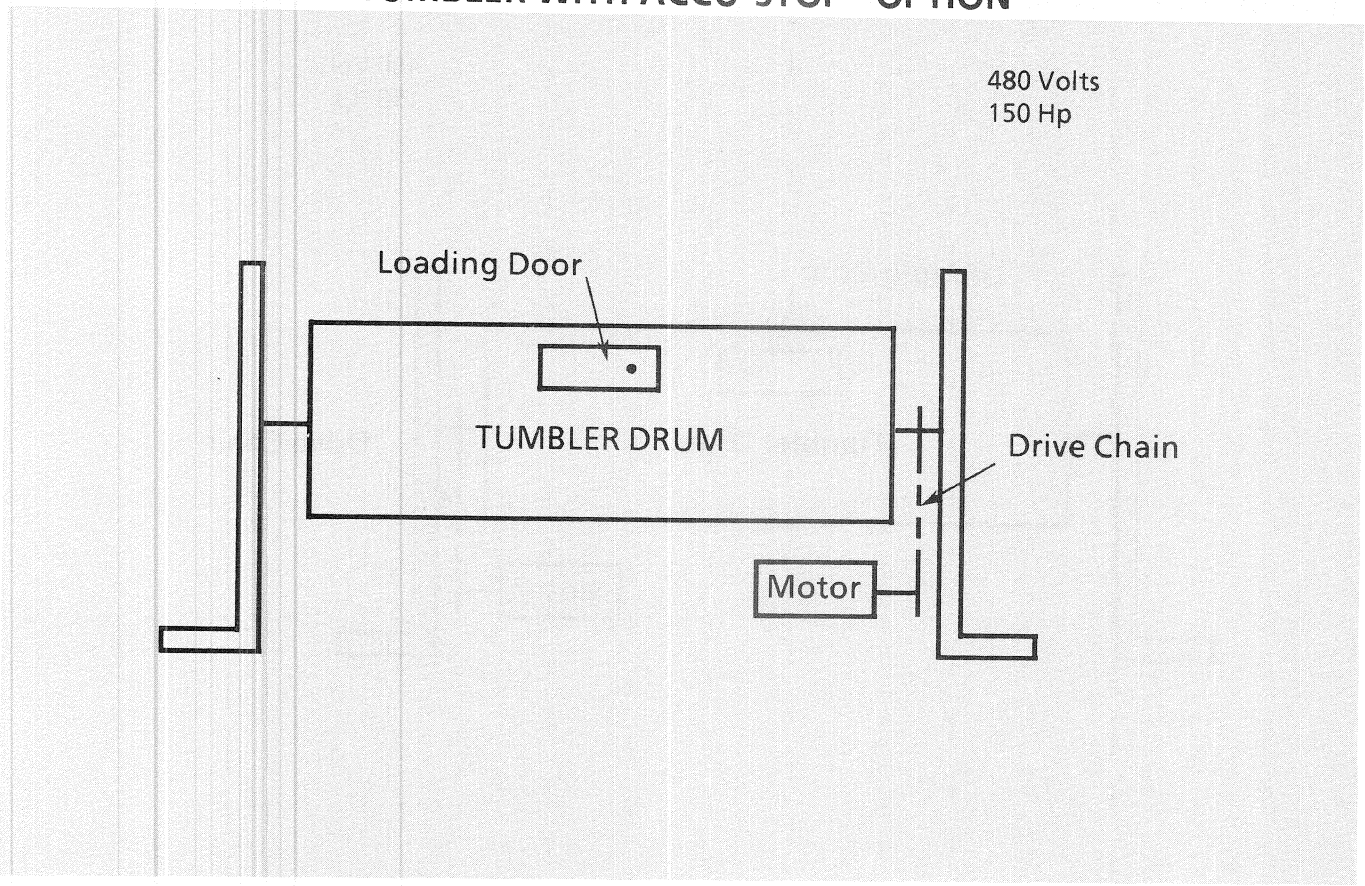

Problem: A tumbler drum used in a hide processing plant required a controlled acceleration to prevent breaking the drive chain. In addition it was desirable to minimize loading and unloading time. The drum would coast for a long period of time before stopping for unloading. Previously a soft start with electronic brake had been applied. This method still required excessive jogging for loading and unloading which resulted in longer production time. It also required additional panel space and wiring for the brake which resulted in higher installation costs.

Solution: The SMC PLUS Controller with the Accu-Stop option was installed. This allowed the drum to be positioned at low speed to get the drum into a position for loading. On stopping, the drum was rotated at low speed and then accurately stopped for unloading. This increased the productivity of the loading/unloading cycle. The SMC PLUS Controller required no additional panel space or power wiring. This made the retrofit easy and reduced the installation costs.

PUMP WITH SOFT START

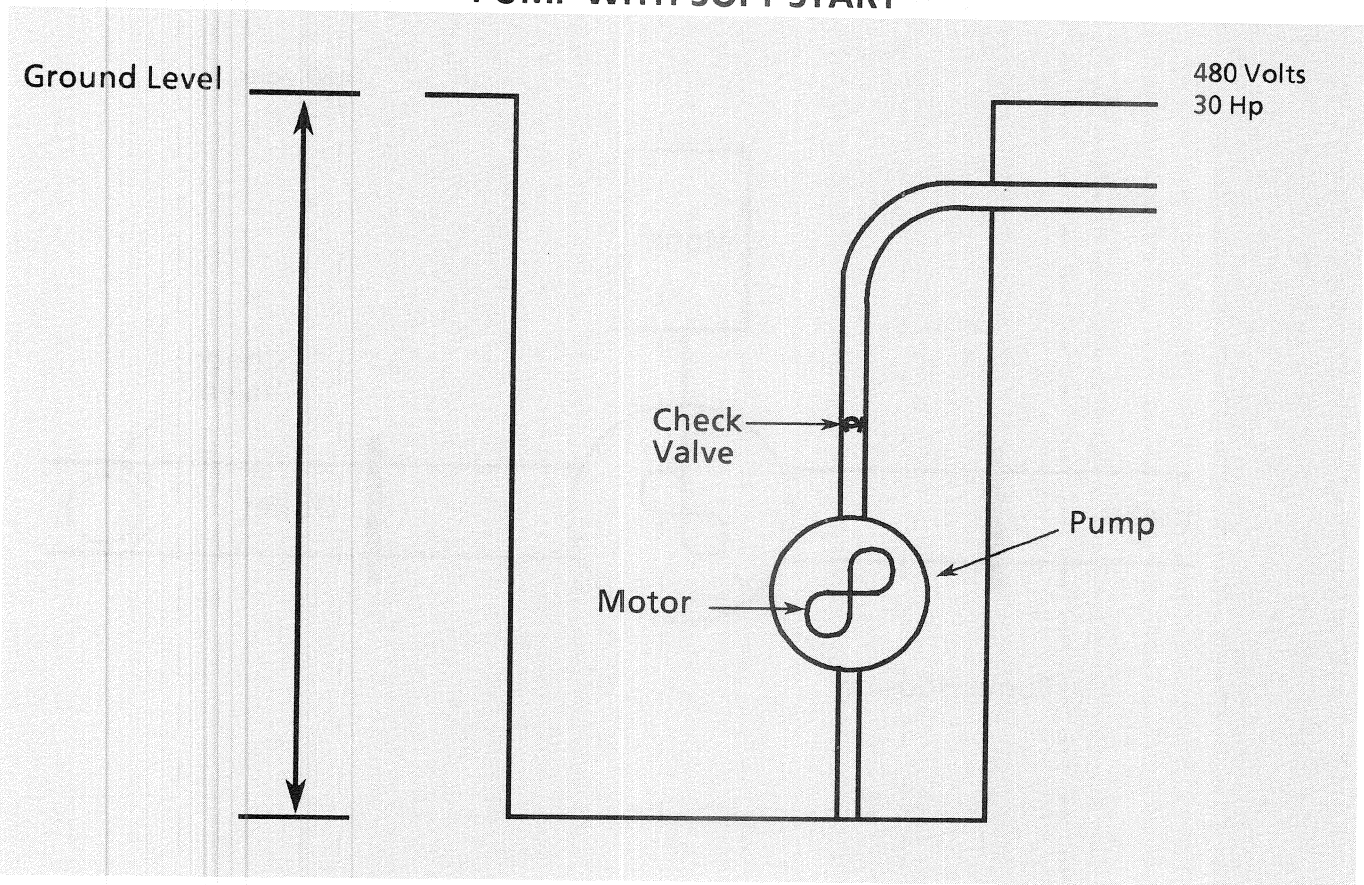

Problem: A municipal water company was experiencing problems with pump impellers being damaged during an across-the-line start due to the heavy shock to the impeller. The pumping station motor was over 100 feet below ground. This made repairing the impeller costly. An additional concern was energy consumption. There were also frequent line failures which resulted in single phasing the motor.

Solution: The SMC PLUS Controller was installed to provide a controlled acceleration and to take advantage of the built-in Energy Saver feature. The reduced torque during start-up did not shock the impeller. The Energy Saver was automatically activated whenever the pump was lightly loaded for long periods of time. The SMC PLUS Controller line diagnostics detected the prestart and running single phasing condition and shut the motor off. This helped protect against motor damage caused by single phasing.

PUMP WITH PUMP CONTROL OPTION

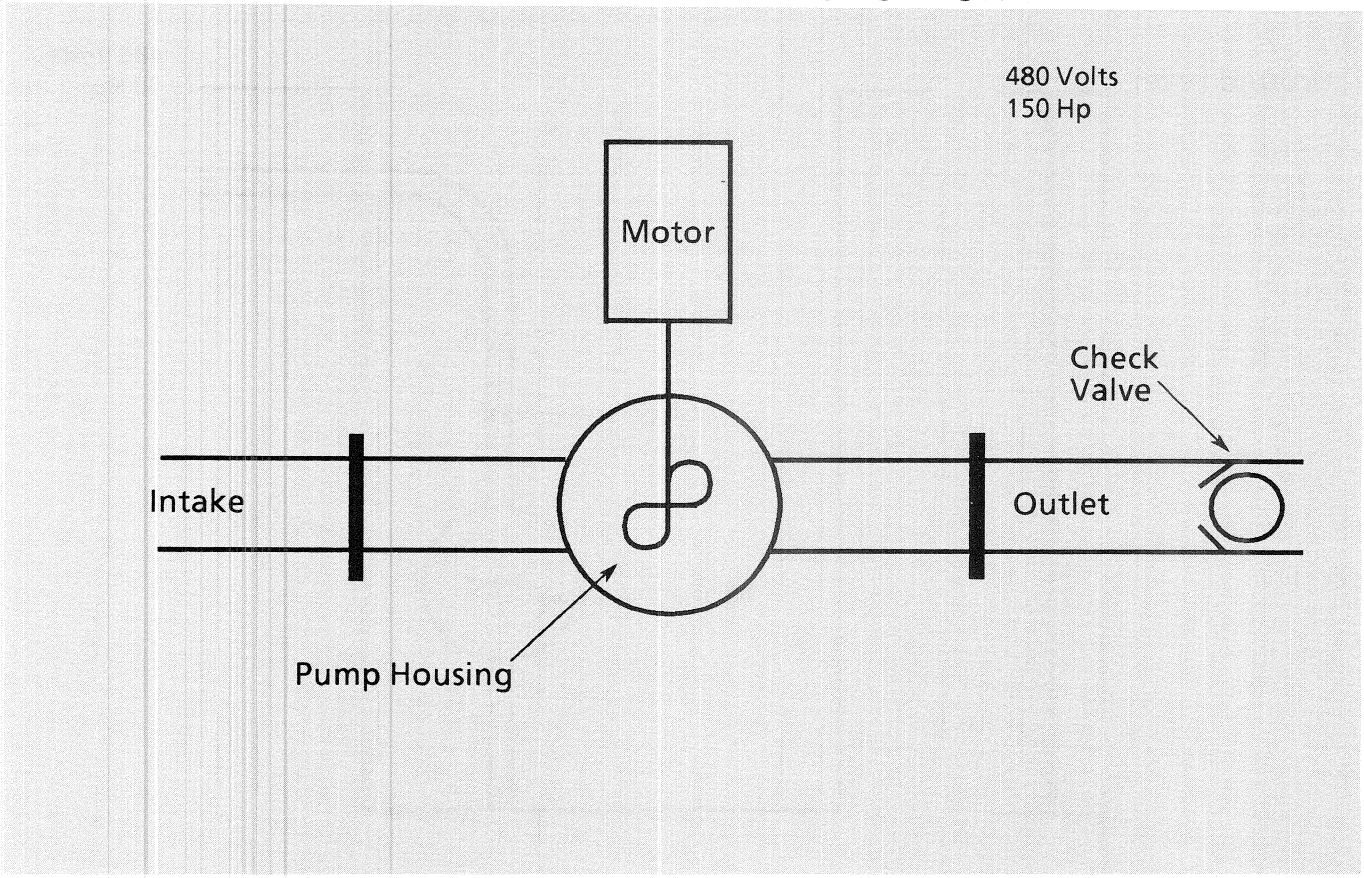

Problem: A municipal pump had a soft start with soft stop to control the pump motor. The soft stop was controlling the motor in an open loop fashion by reducing the voltage to the motor. The stall point was quickly reached. There was not enough torque to drive the load. On stopping, severe surges were causing pipe vibration and breakage.

Solution: The SMC PLUS Controller with the Pump Control option was installed. The pump control removed the surges by controlling the speed of the motor during starting and stopping. The pump was run at full speed except when starting or stopping. The microcomputer analyzed the motor variables and generated control commands to reduce the surges in the system. A variable frequency drive or a feedback device was not needed.

BANDSAW WITH SOFT START

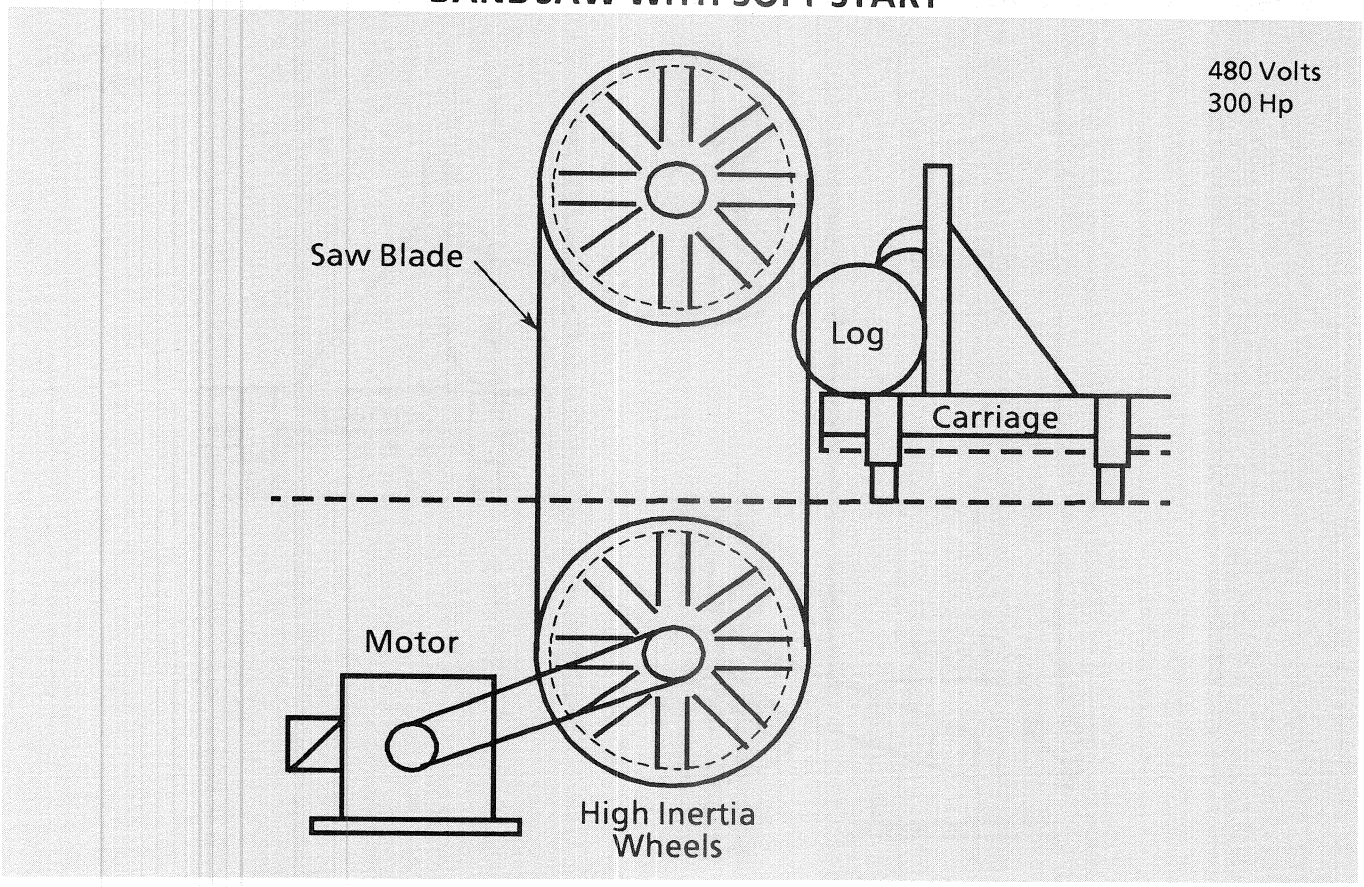

Problem: Due to remote location and power distribution limitations, a reduced voltage starter was needed on a bandsaw. The saw was only shut off during shift changes. In addition, single phasing of the motor was a problem due to distribution limitations.

Solution: The SMC PLUS Controller was installed to provide a 30 second reduced voltage start. This minimized the starting torque shock to the system. The Energy Saver was activated whenever the bandsaw was running lightly loaded. The SMC PLUS Controller diagnostics would detect the single phasing and shut the motor off.

BANDSAW WITH SOFT START AND SMB™ SMART MOTOR BRAKING OPTION

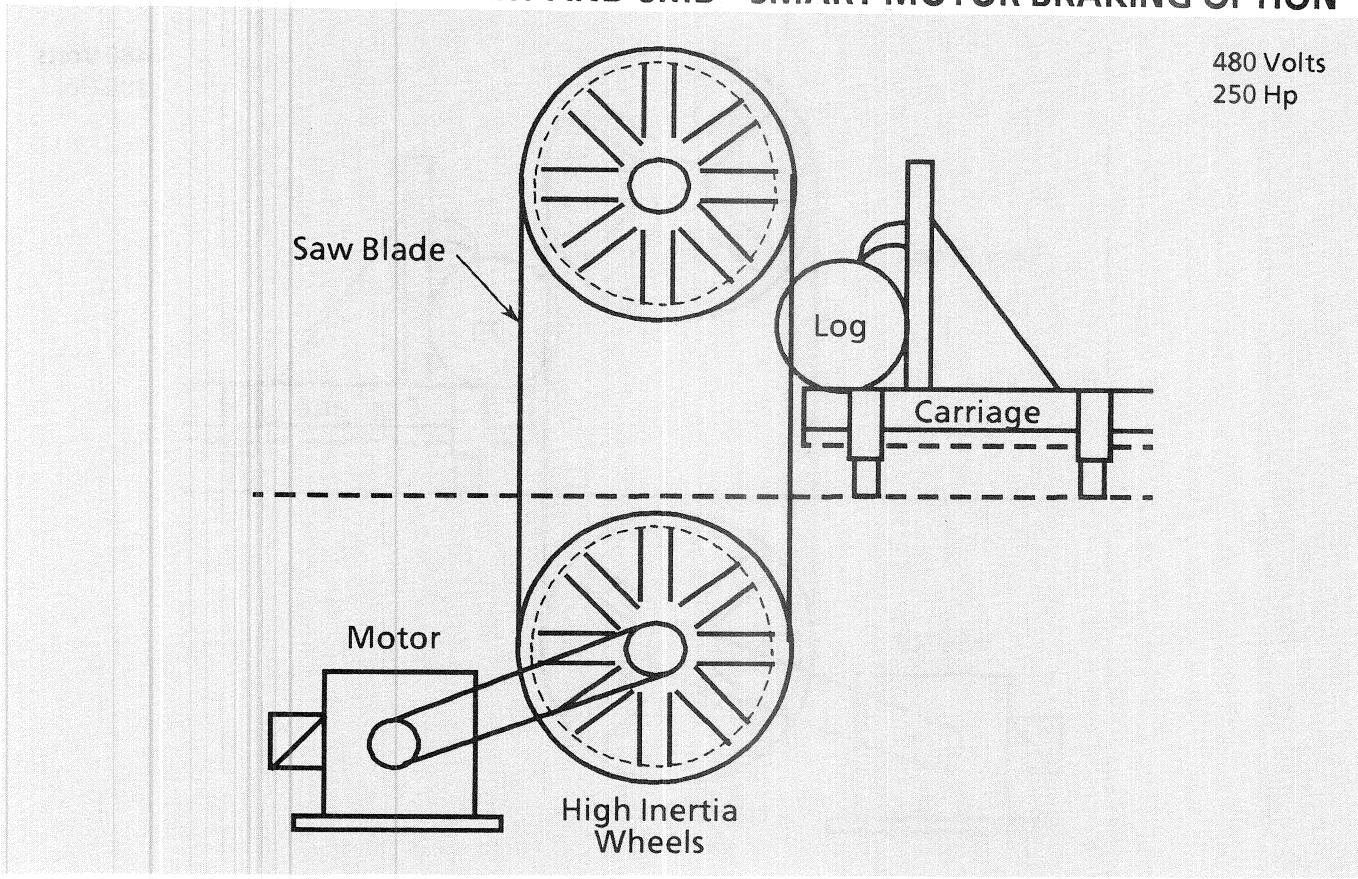

Problem: A bandsaw required a reduced voltage start due to power company restrictions. A brake package was required to reduce the stopping time of the saw. Previously an autotransformer had been used to start the saw and the saw was stopped by "sawing down". Sawing down is accomplished by running logs through the saw after the motor has been de-energized. This results in a large amount of scrap lumber. Other methods were investigated using dedicated braking devices but were unacceptable due to the complexity of installation. These methods required additional panel space for the brake module as well as brake contactors and timers. These methods offered no zero speed detection.

Solution: The SMC PLUS Controller with the SMB Smart Motor Braking option was installed. It provided the reduced voltage start to meet the power company restrictions. The SMB Smart Motor Braking option did not require additional panel space or DC braking contactors. The starting and stopping control was provided in a single modular design providing ease of installation.

BANDSAW WITH SLOW SPEED WITH BRAKING OPTION

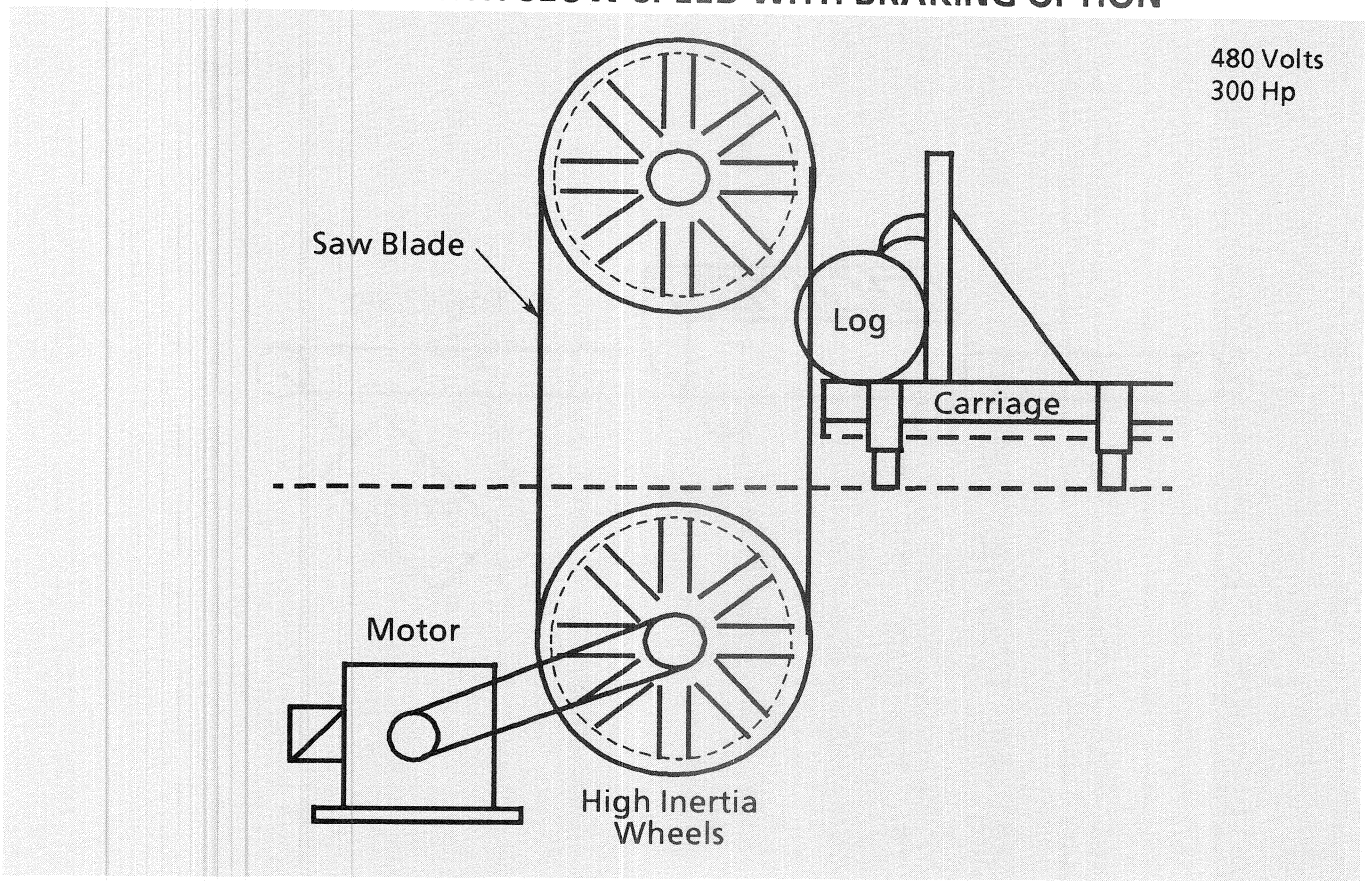

Problem: A bandsaw required 25 minutes to coast to a stop to routinely change the saw blade. A braking package was required to reduce the stopping time. Other methods were investigated using dedicated braking devices, but were unacceptable due to the complexity of installation. These methods required additional panel space for the brake module, brake contactors, and timers. In addition, it was dangerous to bring the saw up to full speed after installing a new blade due to potential alignment problems.

Solution: The SMC PLUS Controller with slow speed with braking option was installed. It provided a slow speed to check the tracking of the saw blade before bringing it up to full speed. The braking option did not require additional panel space or DC braking contactors. The starting and stopping control was provided in a single modular unit providing ease of installation.

TROLLEY WITH SOFT START

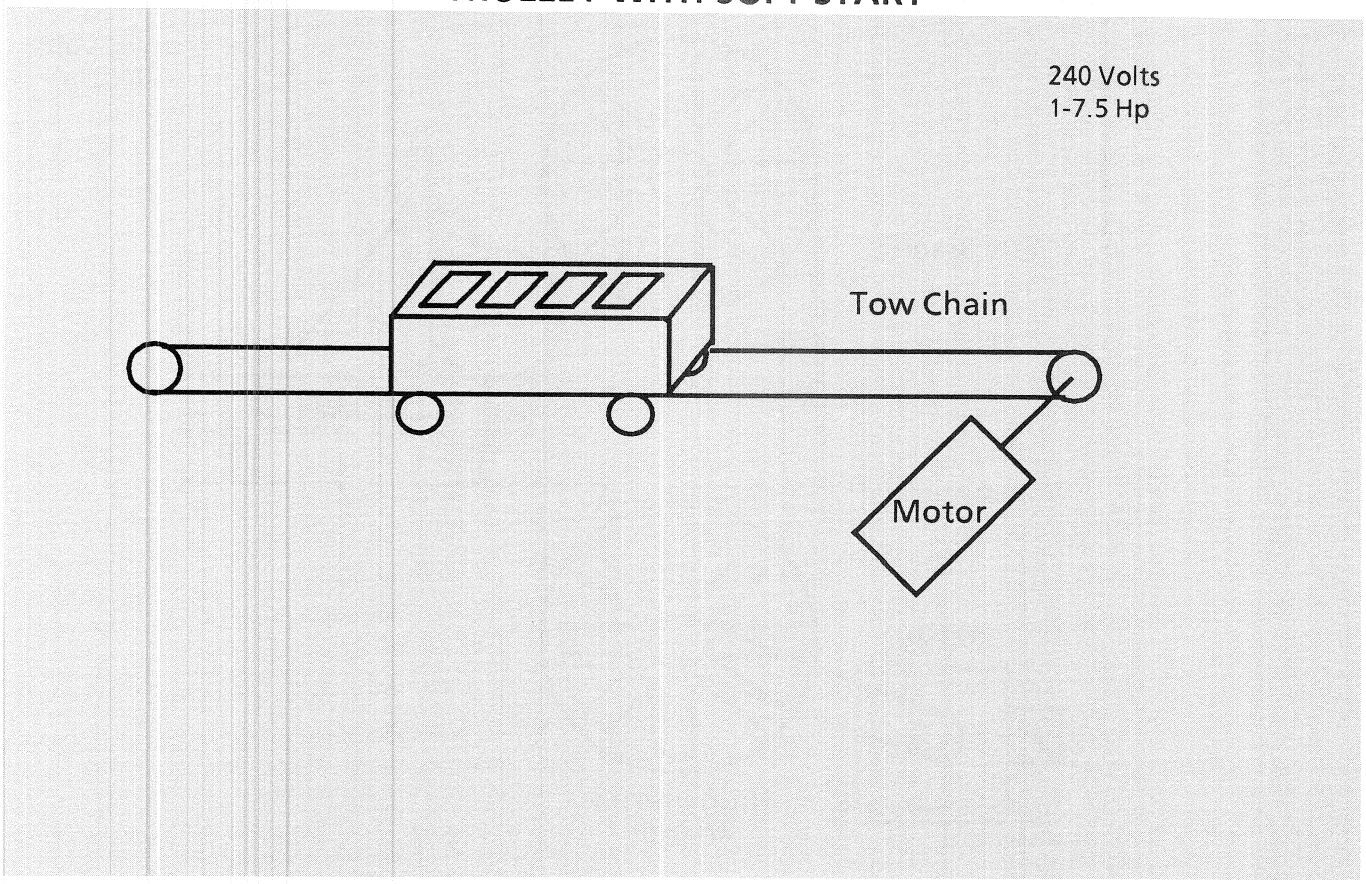

Problem: A trolley with ceramic tiles enters a kiln for heating. When heated the trolley exits the kiln to the production area. Any abrupt movement caused the tiles to fall over resulting in damaged products. An across-the-line starter, gear box and fluid coupling were used to perform this work with some expected lost production. Multiple horsepower applications existed in the same plant. One unit was needed for multiple applications without any changes in adjustments.

Solution: The SMC PLUS Controller was installed to take advantage of the controlled acceleration. This resulted in improved productivity and reduced damaged products. This also minimized the maintenance time on the fluid coupling. Due to the self-calibration of the controller, the same device could be used with any of the motors.

TROLLEY WITH PRESET SLOW SPEED OPTION

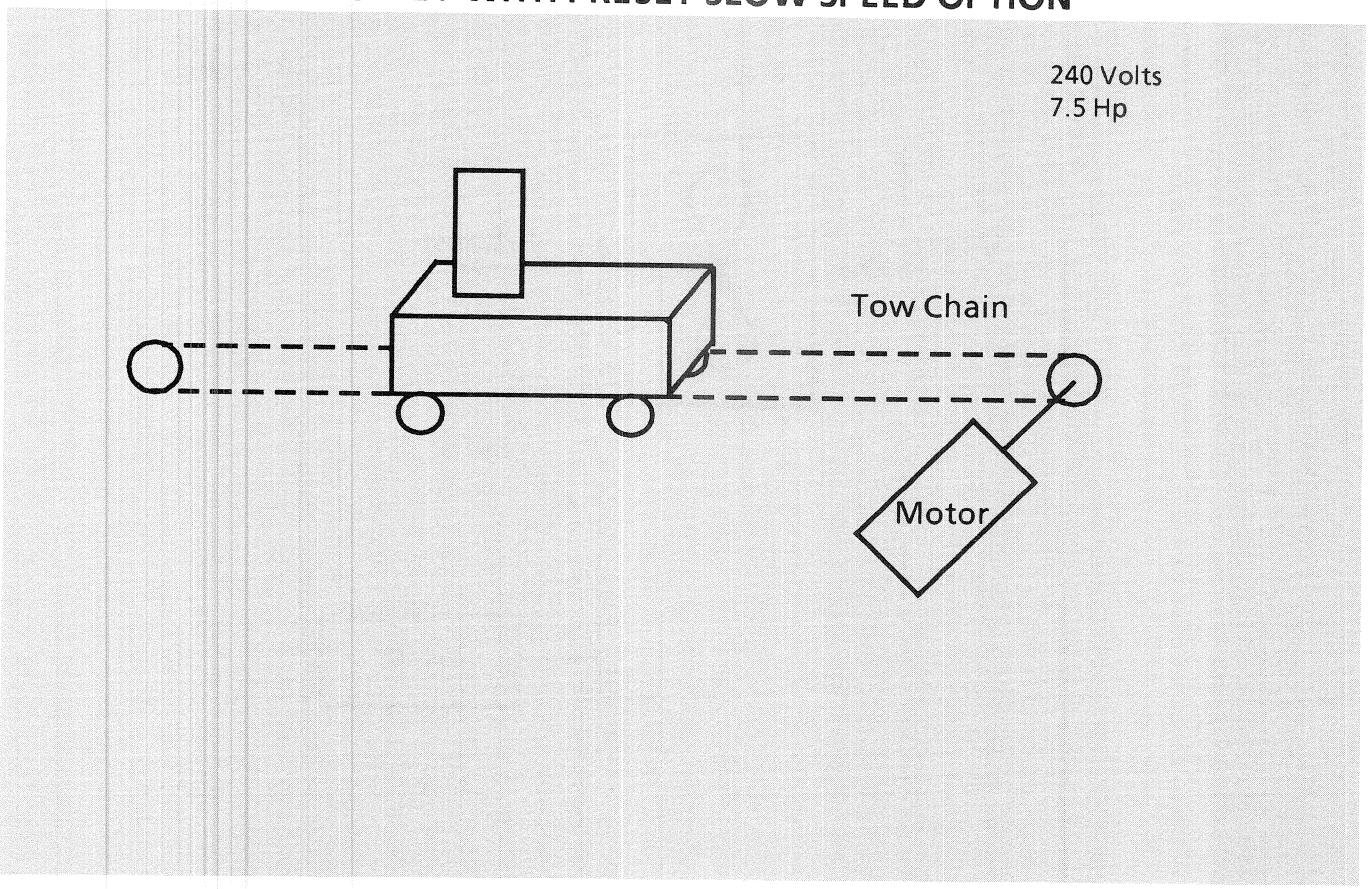

Problem: A trolley required a slow speed and soft start to full speed to keep product from tipping while moving from rest. A variable frequency drive had been considered, but once the cart started to move only a constant speed was required. A cost-effective solution was desired.

Solution: The SMC PLUS Controller with the Preset Slow Speed option was installed. The preset speed of 15% was selected. After the preset, a 20 second ramp start was then selected to ramp the motor to full speed. This helped protect against product tipping during start-up. This provided the control required at a reasonable cost.

EXHAUST FAN WITH SOFT START

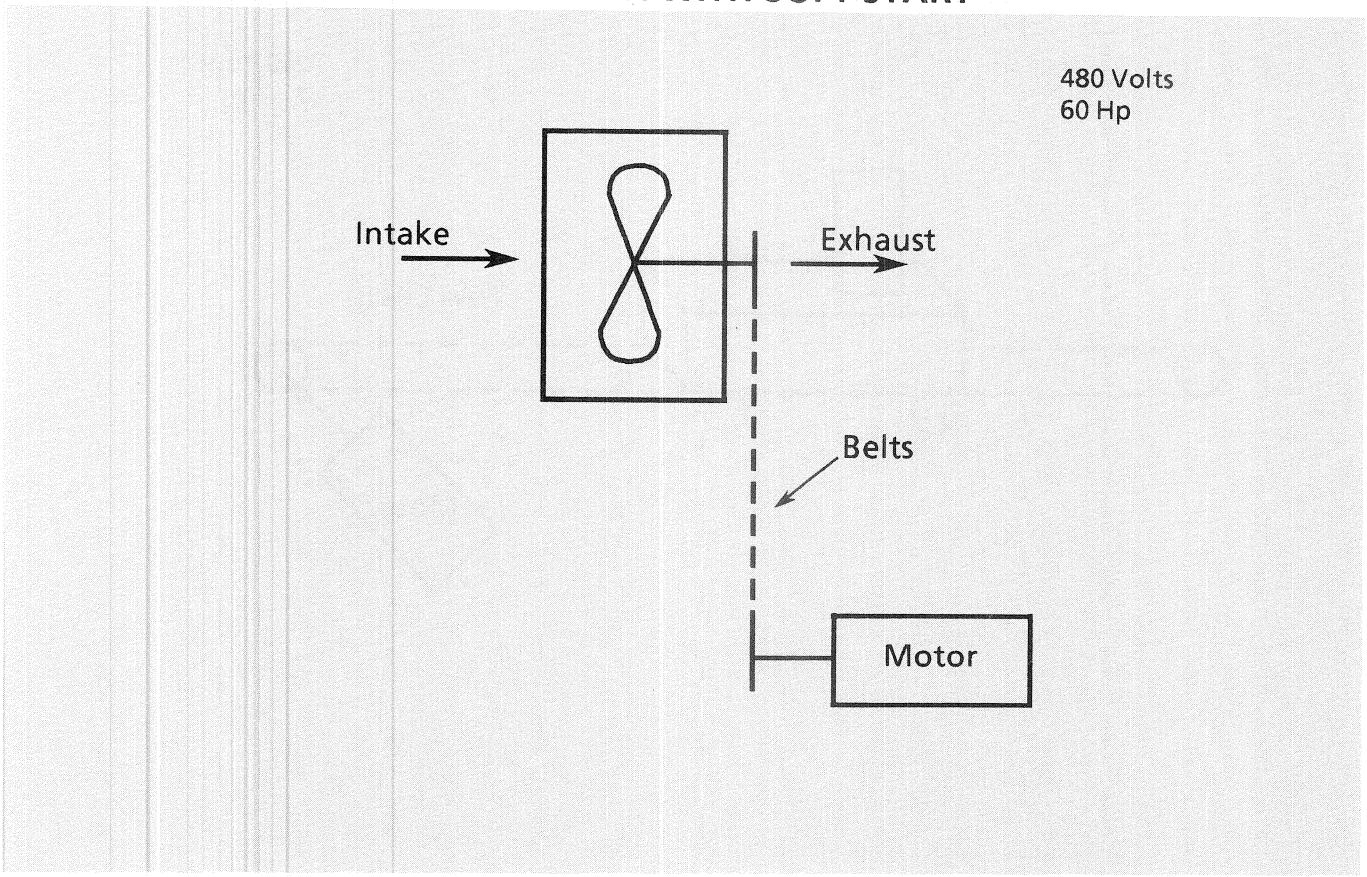

Problem: The belts on an exhaust fan were frequently breaking causing maintenance problems. In addition to the high cost of the belts, the fan belt guard was cumbersome to remove . The high starting torque from the motor was a major contributor to the belt wear. A rugged device was needed to withstand shock and vibration.

Solution: The SMC PLUS Controller was installed as a retrofit to the existing starter. The ramp time was set for 30 seconds. This reduced the starting torque of the motor and minimized the mechanical shock to the belts. In addition, the SMC PLUS Controller meets the same shock and vibration standards as electromechanical devices.

PALLETIZER WITH SOFT START

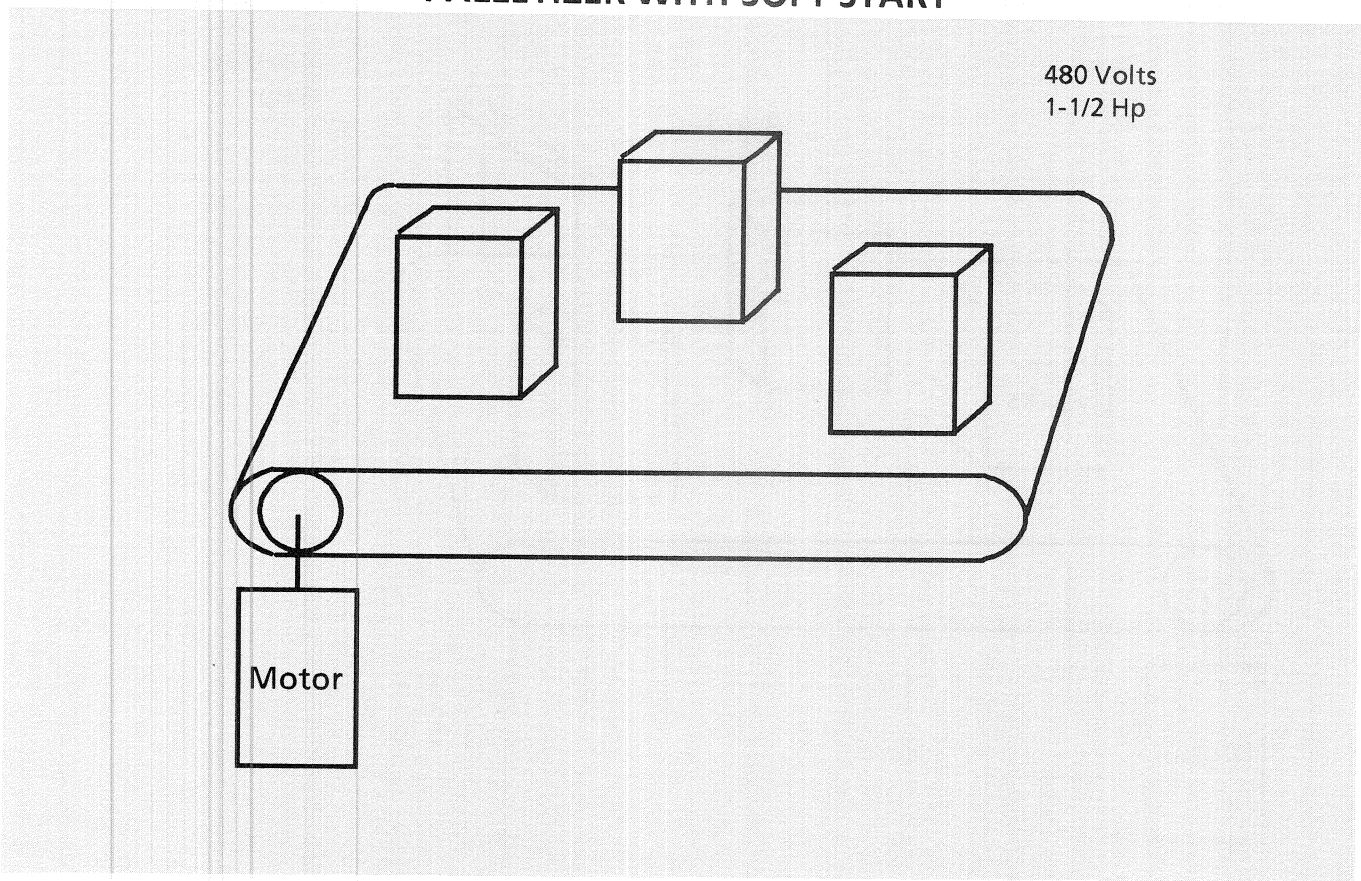

Problem: A palletizer moves cereal boxes through a packaging process to a shrink wrap machine. Across-the-line starting was causing unwanted product spillage and interruption of production due to the uncontrolled torque on startup. In addition, it was desired to put the controls in a motor control center plug-in bucket.

Solution: The SMC PLUS Controller was installed in the motor control center bucket to provide a controlled start. This made the packaging attractive, rather than having a stand-alone enclosure which needed to be wired separately. Shock to the load was reduced eliminating product spillage. This increased the productivity of the shrink wrap process.

PALLETIZER WITH SOFT START AND PRESET SLOW SPEED OPTION

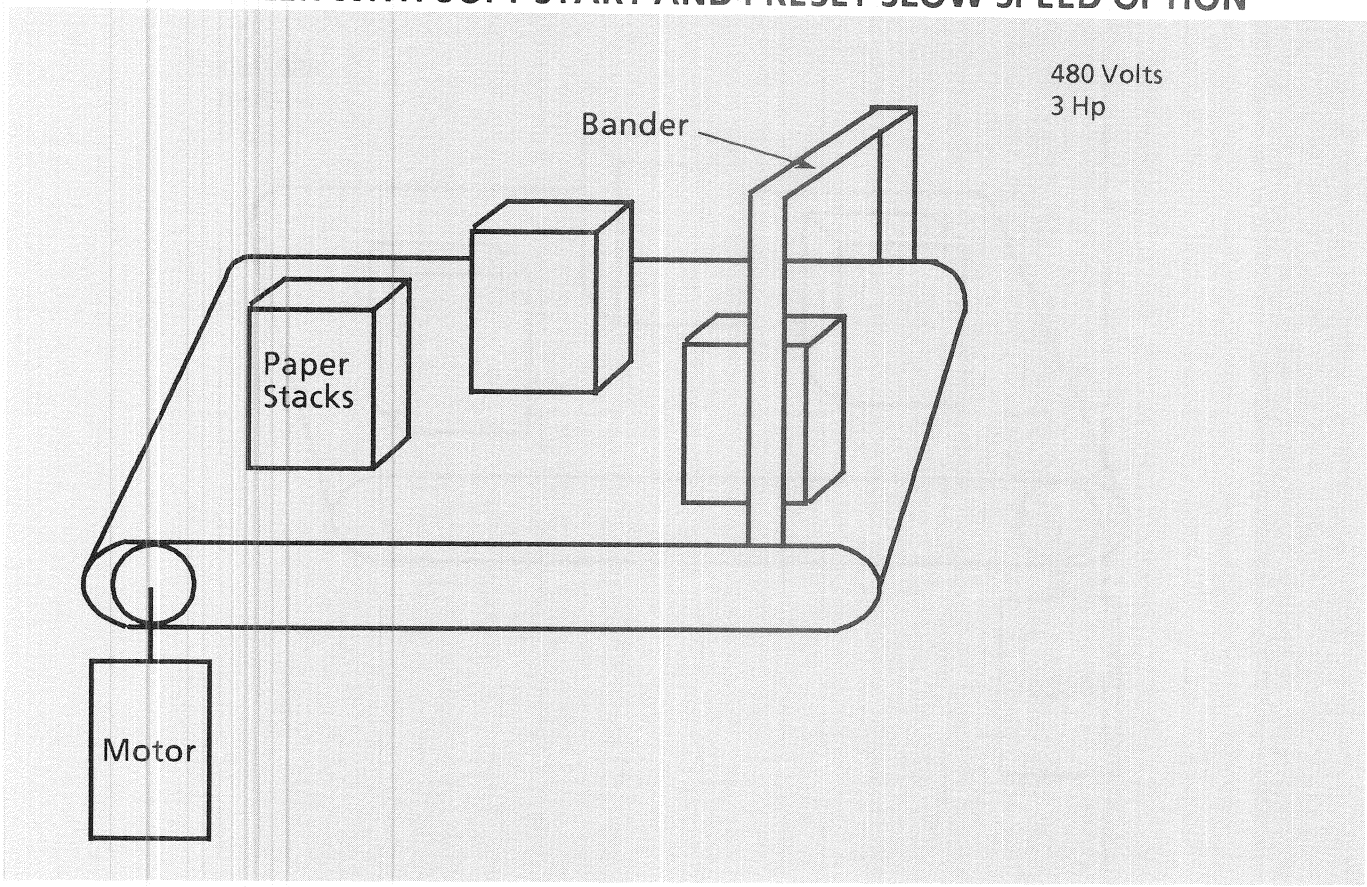

Problem: Stacks of paper were moved to a bander process and then moved through the bander onto a skid. When the papers were loose, a controlled low speed move into the bander was needed. Even after the papers were bound, a soft start was needed to keep the bundles from falling off of the palletizer. The expense of a variable frequency drive to control the motor was not feasible.

Solution: The SMC PLUS Controller with the Preset Slow Speed option was installed. This eliminated the need for frequent jogging of the conveyor to align the load with the bander. The loose papers were moved into the bander at a 15% speed. The bound stacks were soft started for loading on the skid. This was a cost effective method of achieving the results the application required.

ROCK CRUSHER WITH SOFT START

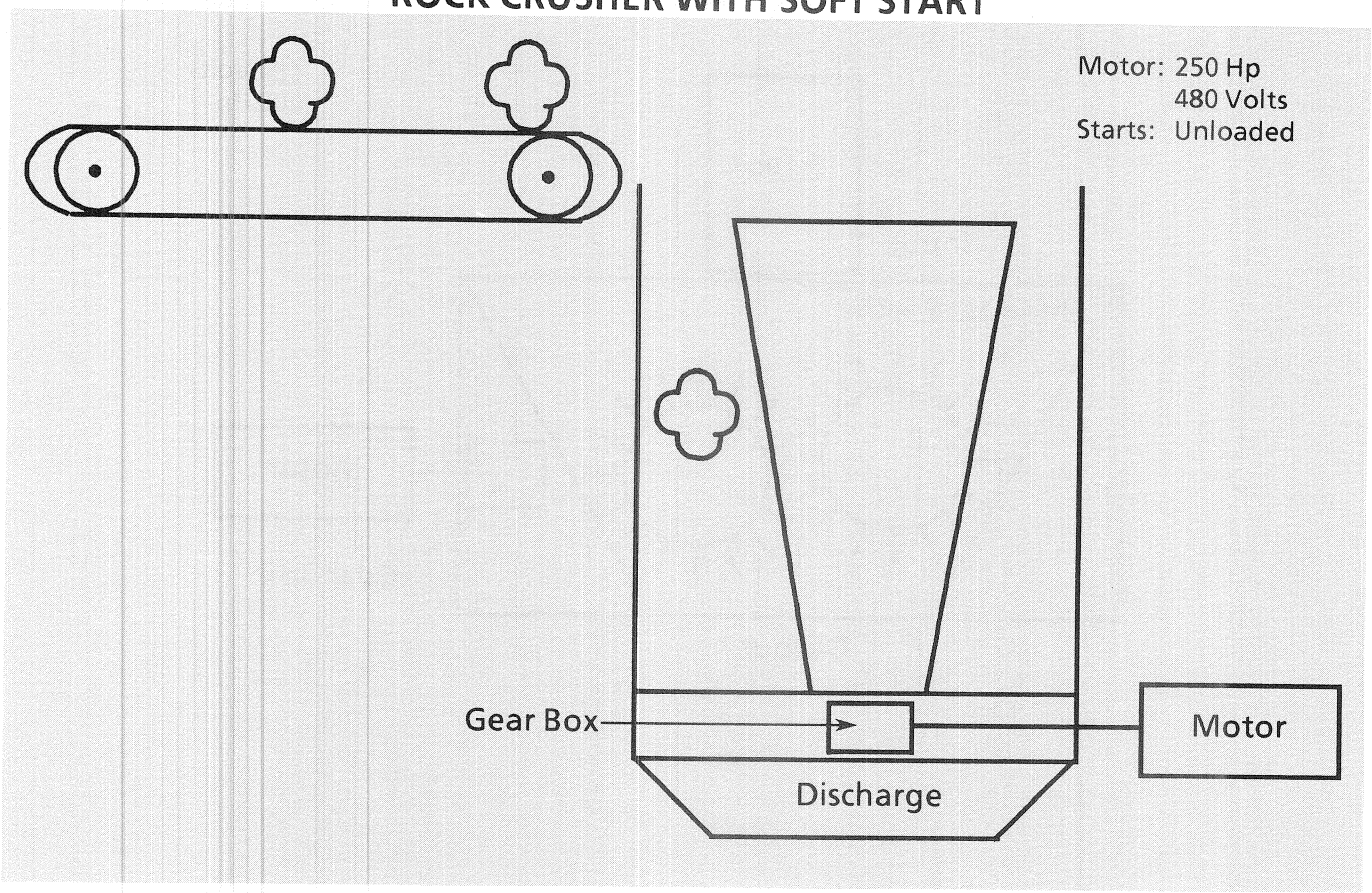

Problem: Due to the remote location of a rock quarry, the power company required a reduced voltage start on all the motors over 150 Hp. The starting current inrush strained the capacity of the system causing severe voltage dips. The rock crusher ran unloaded at times. Occasionally, a stall would occur and the motor overloads would trip. A stall detected in five seconds or less was required.

Solution: The SMC PLUS Controller was installed and set up for a 30 second soft start. This met the power company requirements. The Energy Saver reduced the voltage to the motor when the system was running lightly loaded. The stall select on the SMC PLUS Controller would shut the motor off when a stall occurred.

SHREDDER WITH SOFT START

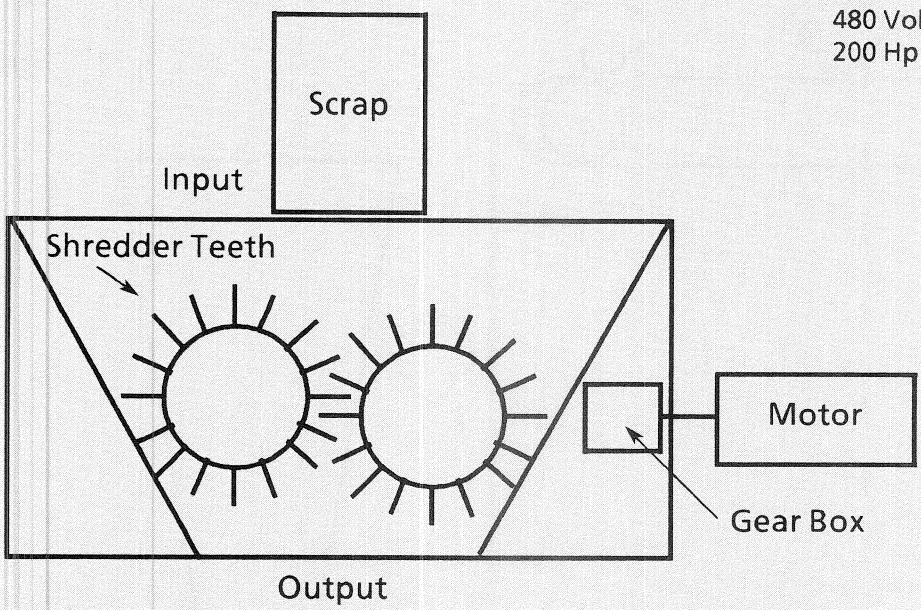

Problem: Due to power company restrictions, a metal shredder required a reduced voltage start. During the process occasionally a stall would occur. There were also periods where the equipment ran unloaded. An autotransformer type starter had been used in the past.

Solution: The SMC PLUS Controller was installed to obtain a reduced voltage start. The controller also provided stall detection which helped protect against excessive motor heating when a stall was encountered. In addition, the Energy Saver was activated reducing the voltage when the motor was running lightly loaded.

HAMMERMILL WITH CURRENT LIMIT START

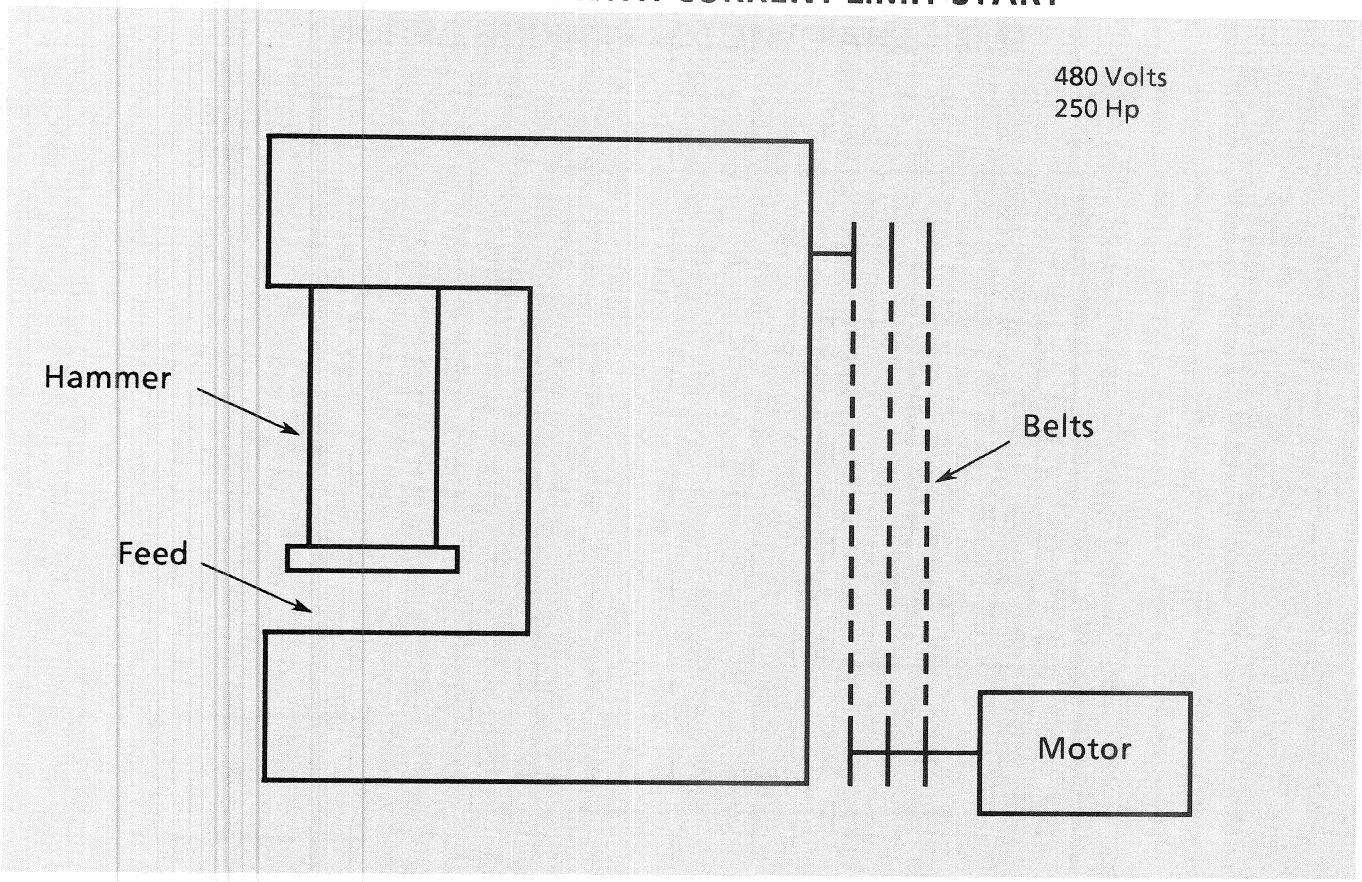

Problem: A hammermill with a high inertia load required a reduced voltage start due to power company restrictions . In addition, belt wear was a problem due to the high torque on start-up. Panel space was very limited. Traditional reduced voltage starters would not fit in the available space.

Solution: The SMC PLUS Controller was installed and set up for 30 second, 450% current limit start. This met the power company's requirement for the reduced voltage start. It also extended the life on the belts as the starting torque was reduced. A current limit start was selected to quickly break away the high inertia load, yet provide a reduced voltage start. The Energy Saver was utilized when the mill was running lightly loaded. The compact SMC PLUS Controller fit into the available space.

HAMMERMILL WITH CURRENT LIMIT AND SMB™ SMART MOTOR BRAKING OPTION

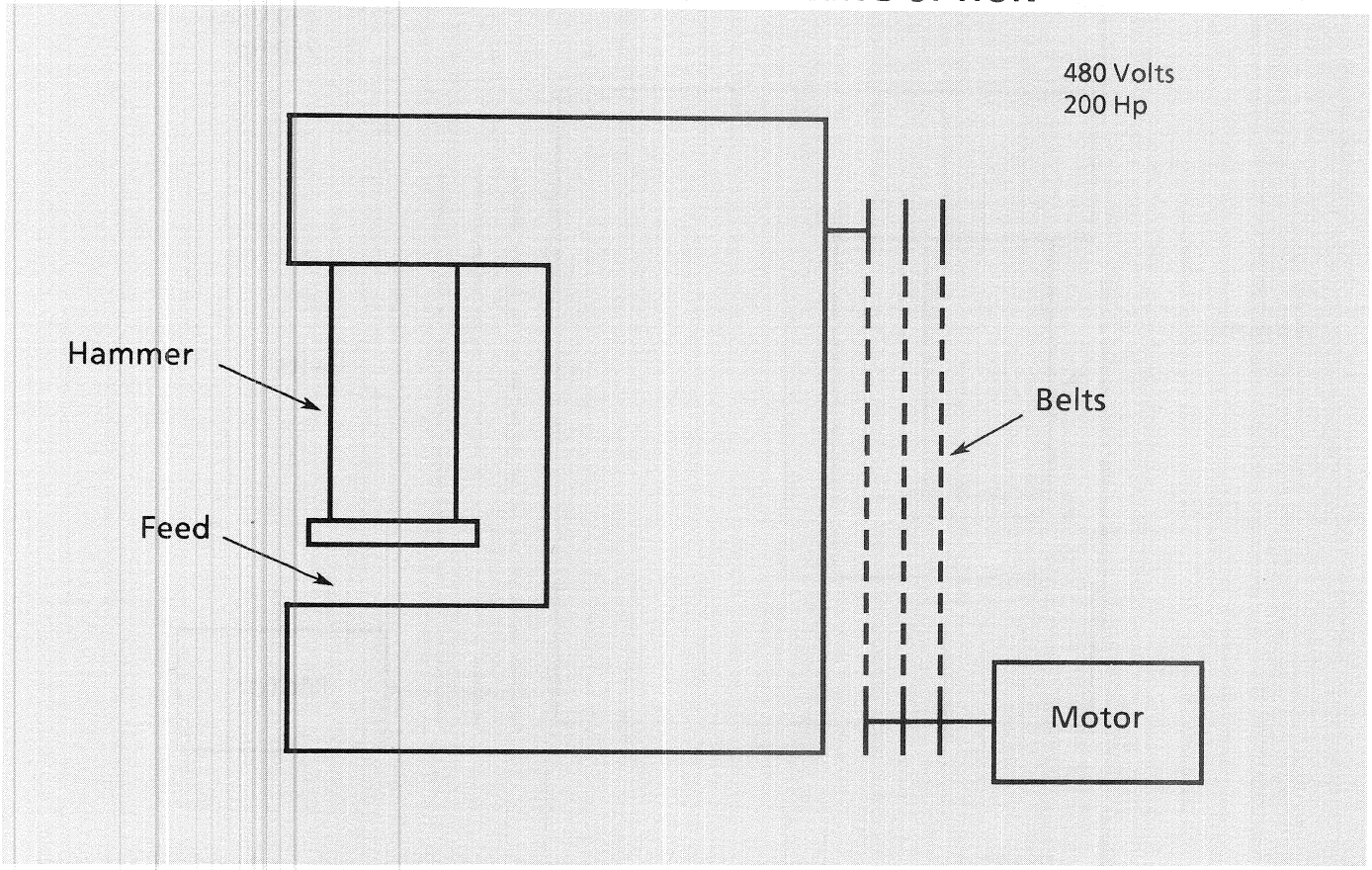

Problem: A hammermill required a reduced voltage start due to power company restrictions. A stopping time of less than a five minute coast was desired. To save panel space the customer wanted to incorporate both starting and stopping in the same package.

Solution: The SMC PLUS Controller with the SMB Smart Motor Braking option was installed. A 30 second, 450% current limit acceleration was selected. This reduced the mechanical stress to the belts on startup as well as met the reduced voltage starting requirement. The braking function was accomplished without any additional power wiring, panel space, or contactors. The braking time was adjusted to a 30 second stop. Zero speed was detected without any additional sensors or timers. The current limit start and braking were both accomplished within the same modular package.

CENTRIFUGE WITH CURRENT LIMIT START

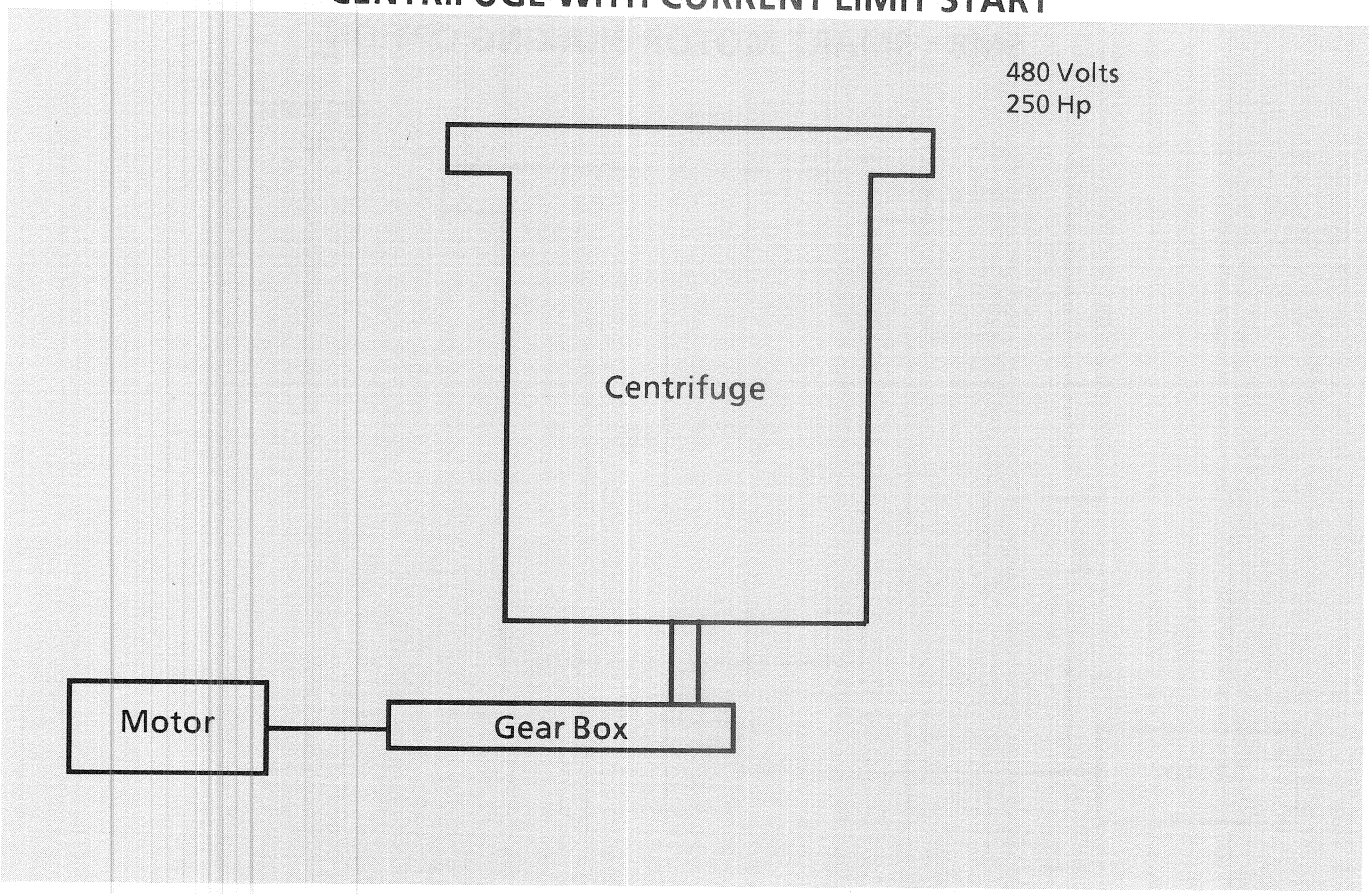

Problem: Due to the high starting torque, the gear box to a centrifuge was being damaged. A reduced voltage starter was desired as this motor was near the end of a distribution line. A unit with a circuit breaker combination enclosure was needed. Also a modular unit with no exposed boards when the enclosure door was opened was required.

Solution: The SMC PLUS Controller was installed and set for a 30 second, 450% current limit start. This limited the starting torque of the motor and limited the shock to the gear box that occurred on start-up. In addition, the Energy Saver reduced the voltage to the motor when it was running lightly loaded. The controller was ordered in an enclosure with a circuit breaker and motor overload. The controller has no exposed boards, fulfilling the packaging requirements.

CENTRIFUGE WITH CURRENT LIMIT AND SMB™ SMART MOTOR BRAKING OPTION

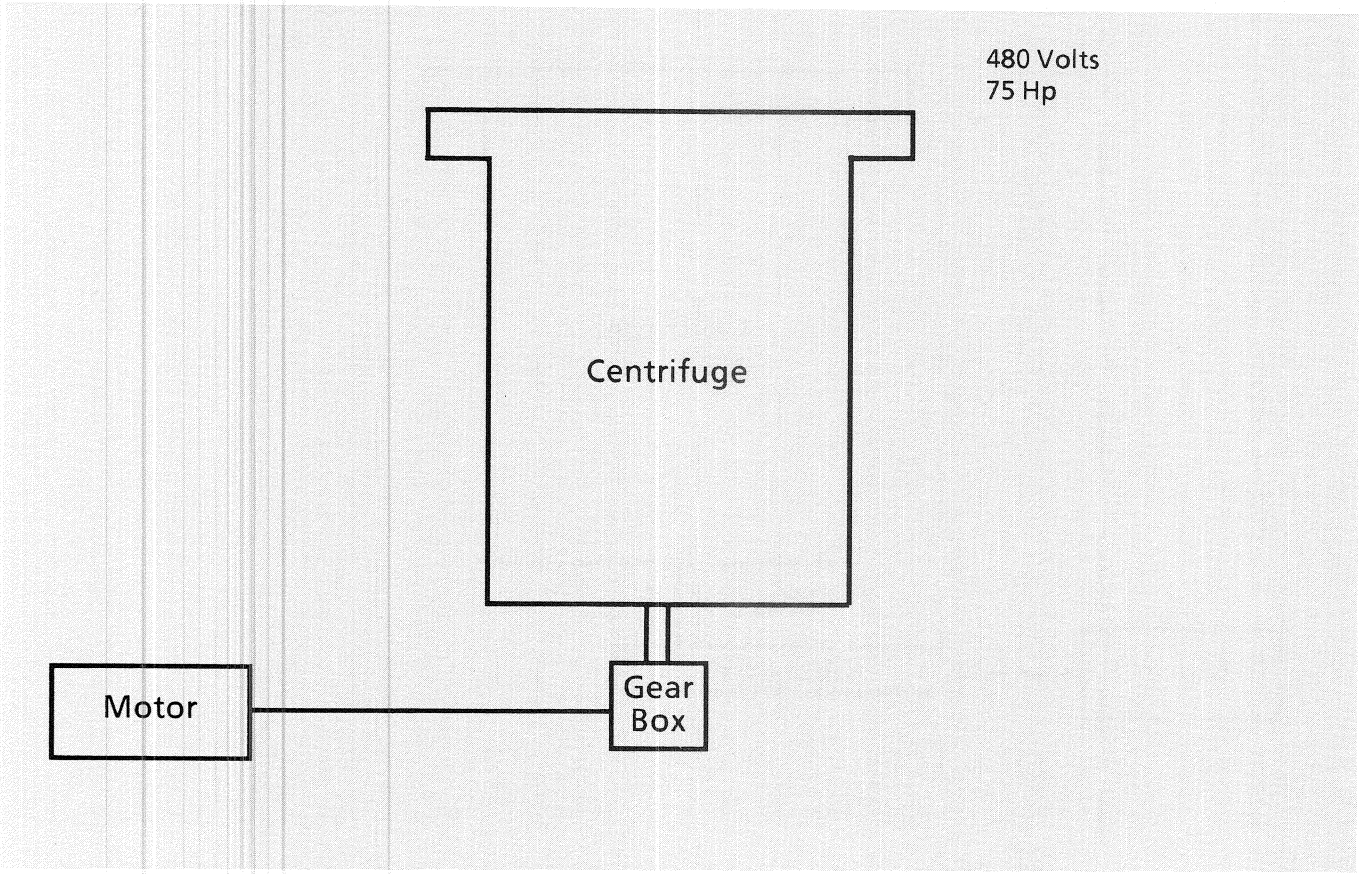

Problem: A centrifuge required a reduced voltage start due to power company restrictions. The high torque which occurred during starting was causing damage to the gear box. It was desired to shorten the stopping time as the load would coast for 10 to 15 minutes. This caused delays in the production process. A Wye Delta starter with a mechanical brake was currently used. A zero speed switch was used to release the brake. The mechanical brake required frequent maintenance and replacement which was costly and time consuming. Both the mechanical brake and zero speed switch needed to be replaced.

Solution: The SMC PLUS Controller with the SMB Smart Motor Braking option was installed. The starting time was set for a 30 second, 450% current limit start. This reduced the starting torque stress to the gear box. It also met the power company requirements for a reduced voltage start. The SMB Smart Motor Braking option allowed the centrifuge to be stopped in approximately one minute. The SMC PLUS Controller with SMB Smart Motor Braking option did not require any additional mounting space or panel wiring. It was mounted in a panel that was considerably smaller than the previous controller. In addition, the controller did not require frequent maintenance and could sense zero speed without a feedback device to de-energize the brake.

MIXER WITH SOFT START

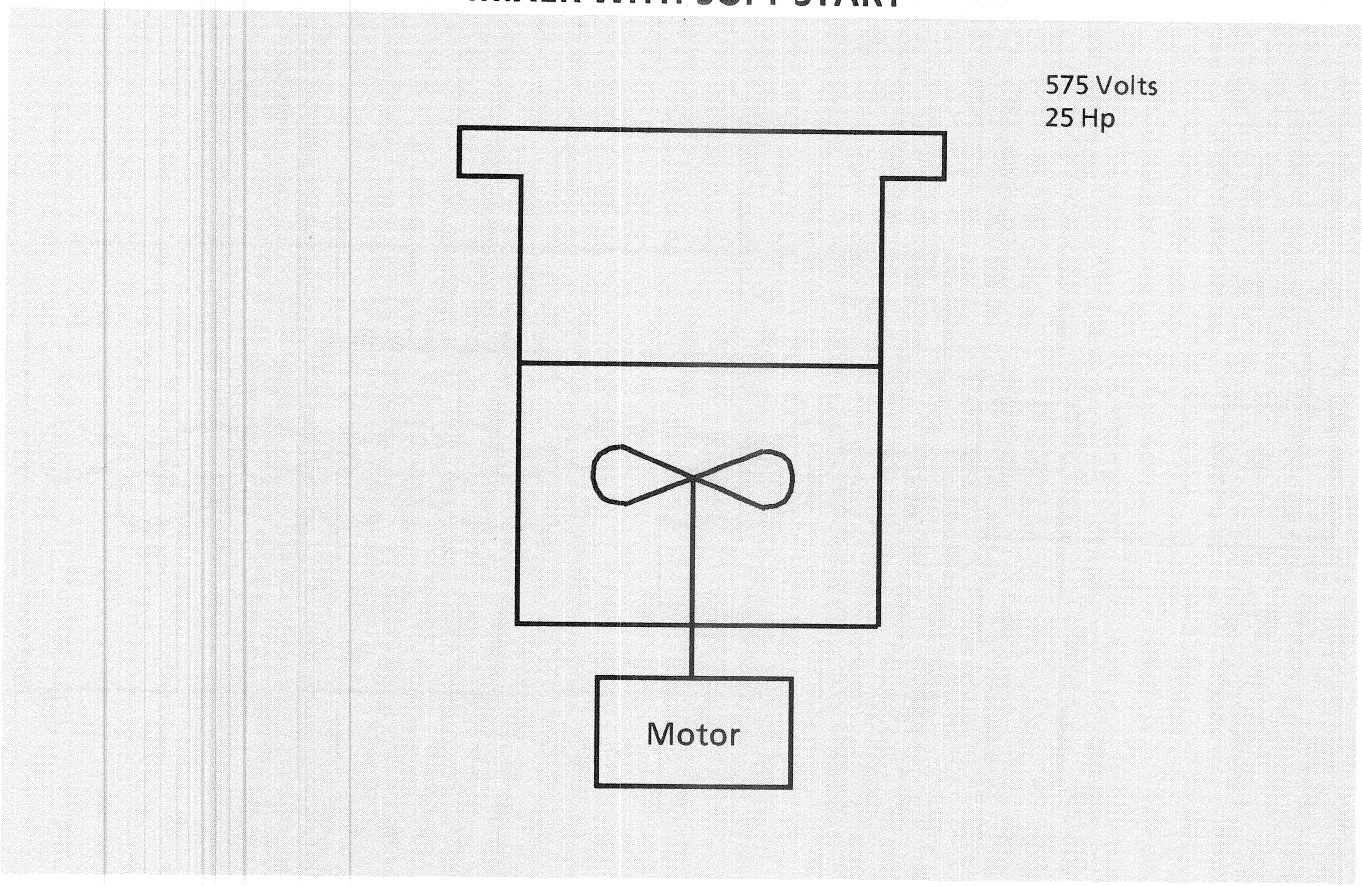

Problem: A mixer used an across-the-line starter to control the starting of a motor. It would frequently break the shear pin causing the batch to be ruined as the material solidified. This required cleaning of the vat. Occasionally, the material would begin to congeal prior to starting the mixer. Full starting torque would then be required to start the motor.

Solution: The SMC PLUS Controller was installed and set for a 15 second soft start acceleration. This smoothed the shock to the impeller on start-up and kept the shear pin from breaking. In addition, the Energy Saver reduced the voltage to the motor when it was running lightly loaded. The SMC PLUS Controller could be quickly configured to provide a full voltage start on those occasions where full starting torque was required. This saved production time as the vat no longer required unloading to start the motor.

MIXER WITH PRESET SLOW SPEED OPTION

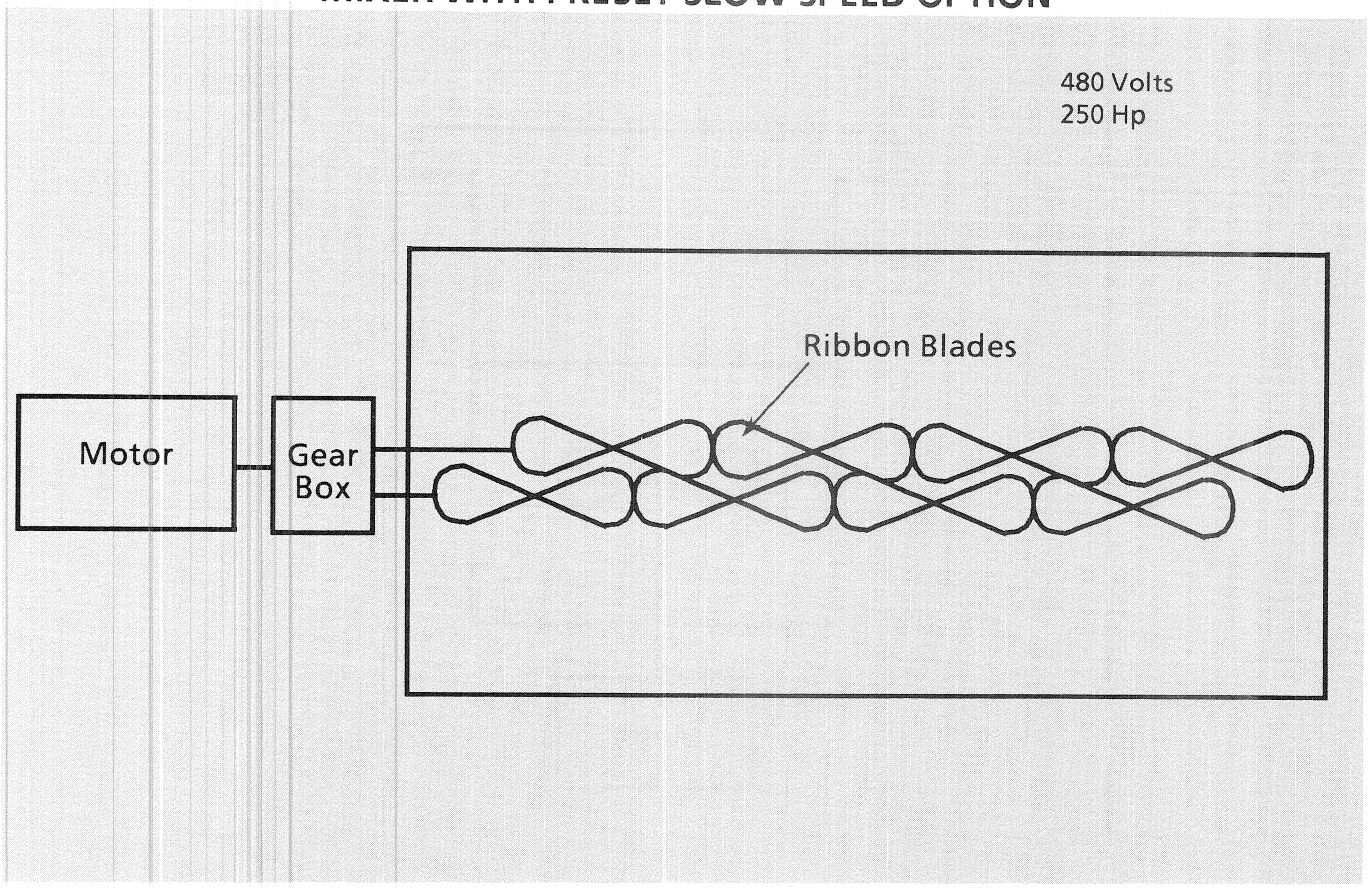

Problem: A mixing process required a soft start to prevent damage to the mixer as well as meet the local power requirement for reduced voltage starting. Running the machine at slow speed on start-up to ensure it was not binding was desirable. The mixer would then be run at full speed.

Solution: The SMC PLUS Controller with the Preset Slow Speed option was installed. This allowed the mixer to be jogged at low speed to assure there was no binding. The SMC PLUS Controller was then set to a 30 second soft start ramp to meet the local reduced voltage requirement. The Energy Saver was activated for slack production periods. This allowed greater control of the motor without the expense of a variable frequency drive.

CHILLER WITH SOFT START

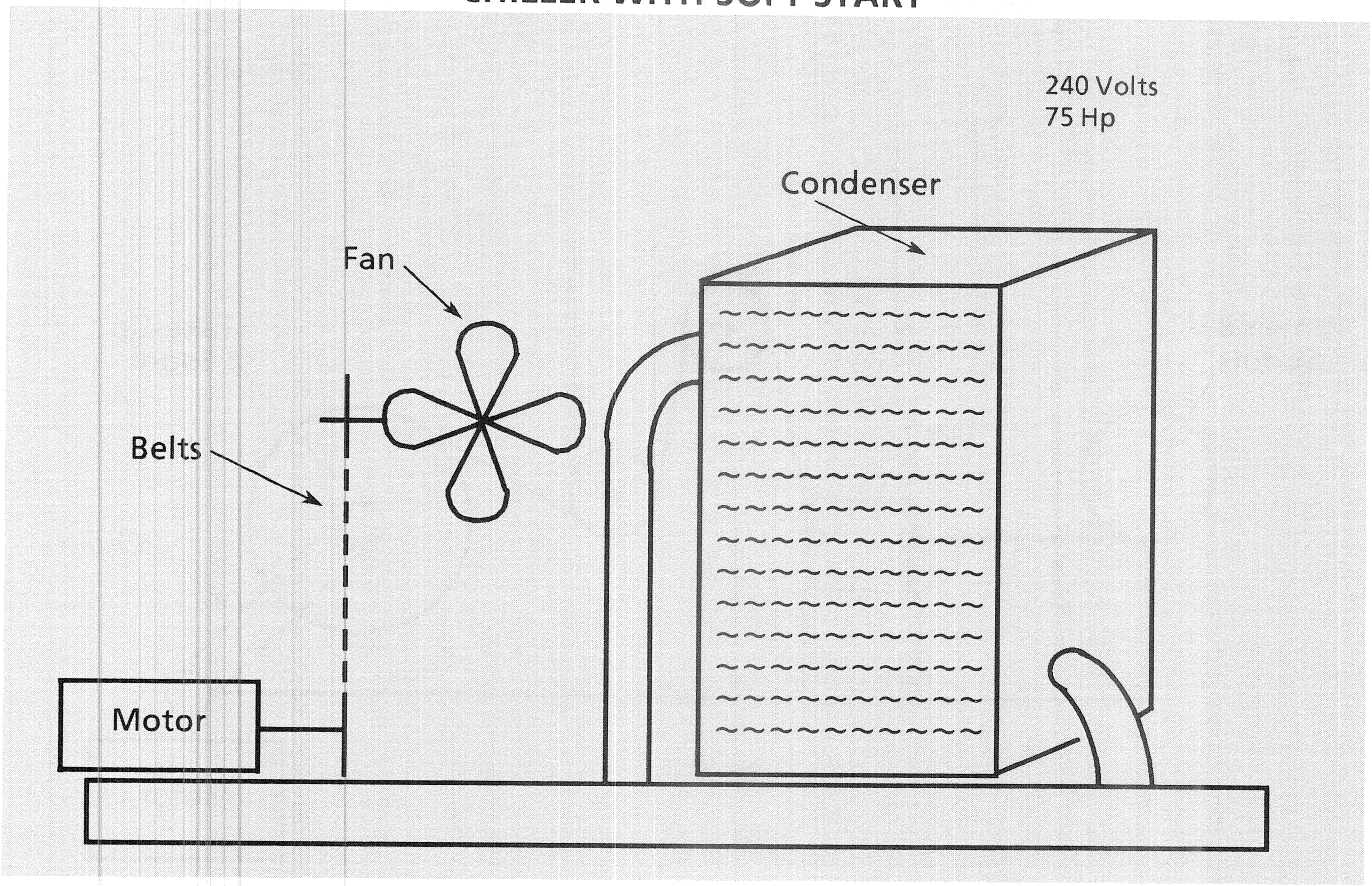

Problem: A belt-driven fan on a chiller was frequently breaking the belt due to high starting torque. This caused excessive downtime as the housing had to be removed to replace the belt. A combination across-the-line starter was being used to control the motor. Control panel space was limited. A device where control voltage was the same as the line voltage was required as there was not room for a control transformer.

Solution: The SMC PLUS Controller was installed as a retrofit to the chiller. It was set up for a 20 second soft start. This reduced the snap to the belts that occurred on start-up. In addition, on start-up the belt did not squeal. A control transformer was not required as the SMC PLUS Controller operates up to 240 volts control voltage. The customer was able to retrofit the controller into the existing panel space.

WIRE DRAW MACHINE WITH SOFT START

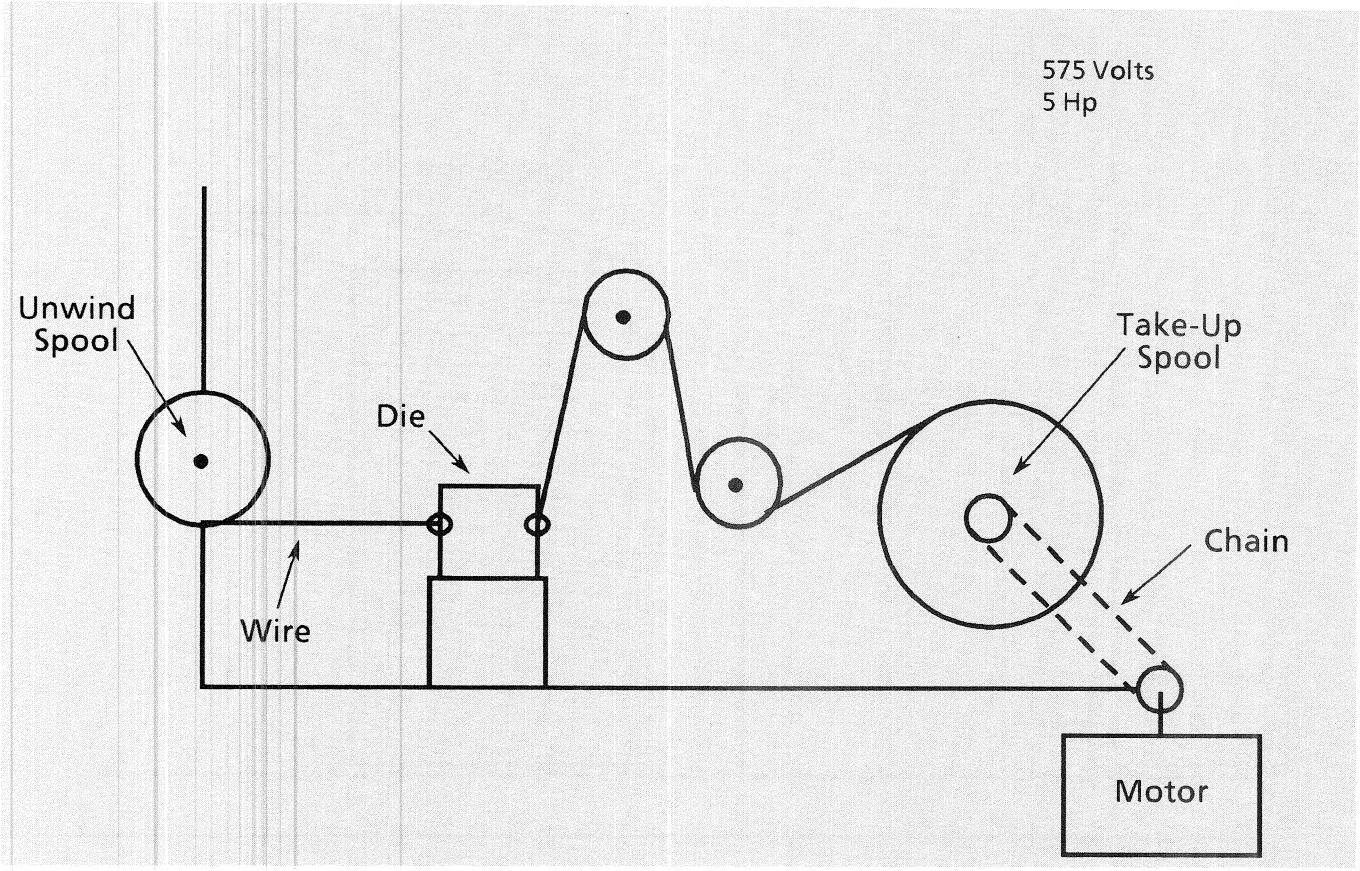

Problem: An across-the-line starter was used on a wire draw machine to pull wire. This rapid cycling application caused mechanical wear on the chain and the electromechanical starter. Other soft starts had been experimented with, but not enough torque was developed to pull the wire through the die.

Solution: The SMC PLUS Controller was installed to accelerate the motor smoothly. The kickstart feature was adjusted to provide enough torque to pull the wire through the die. After the initial kickstart, the controller went back to the soft start acceleration mode. This reduced the amount of the starting torque to the chain and helped lower maintenance inspection and repair time. The soft start time was set for a 10 second ramp.

COOLING TOWER FAN WITH SOFT START

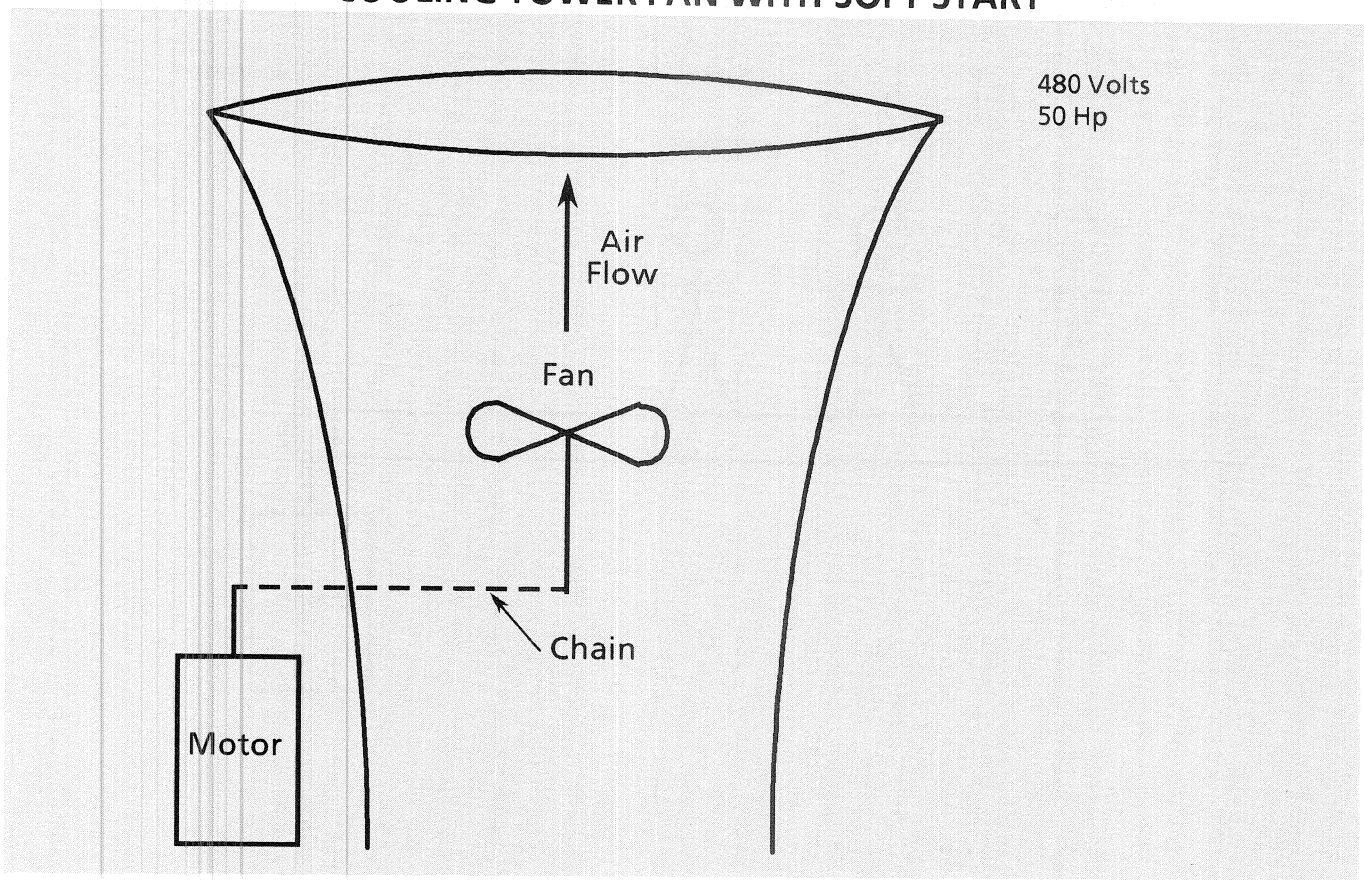

Problem: A chain driven fan that moderates the temperature of water in a chemical process was started across the line. This required frequent inspection and maintenance because of problems with the chain driven system. In the winters, ice would form on the blades. A controlled current start was required. The longer starting times were causing voltage dips.

Solution: The SMC PLUS Controller was installed to provide a controlled acceleration. A 20 second start time was selected. This minimized the mechanical shock encountered during the across-the-line start and reduced maintenance inspection. In the winter when a longer start was required, the controller was quickly set up for a 450% current limit start. (The only adjustments required were changing the DIP switches.) This protected against the severe line dips the customer had been experiencing. Both forms of acceleration are standard within the same SMC PLUS Controller.

POWER WALK WITH SOFT START AND SOFT STOP OPTION

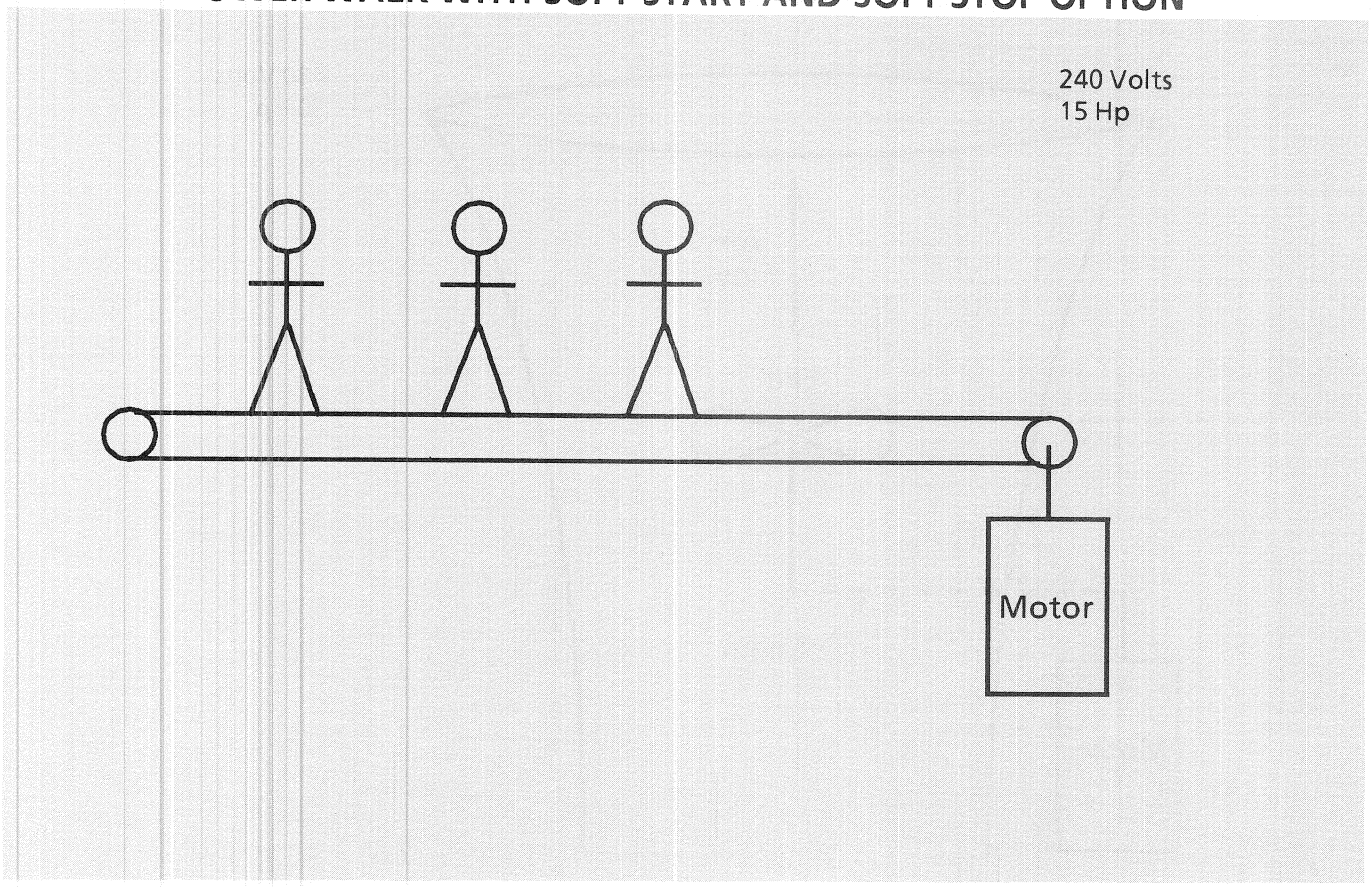

Problem: A power walk at an airport required a soft start to prevent damage to the drive chain gear box on start-up. A soft stop was also required in case the power walk would be shut off while people were on the belt. There would be multiple units at the site. A controller that could be quickly replaced and adjusted was required.

Solution: The SMC PLUS Controller with the Soft Stop option was installed. Adjustments for a 10 second soft start, a 10 second soft stop, and the Energy Saver were set. This allowed the power walk to have a controlled start and stop. During periods where the walk was unloaded, the SMC PLUS Controller Energy Saver reduced the voltage to the motor. Should it become necessary to replace the control module, a replacement could be quickly plugged in. The same control module was used for all applications minimizing spare part requirements.

TOWLINE CONVEYOR WITH SOFT START

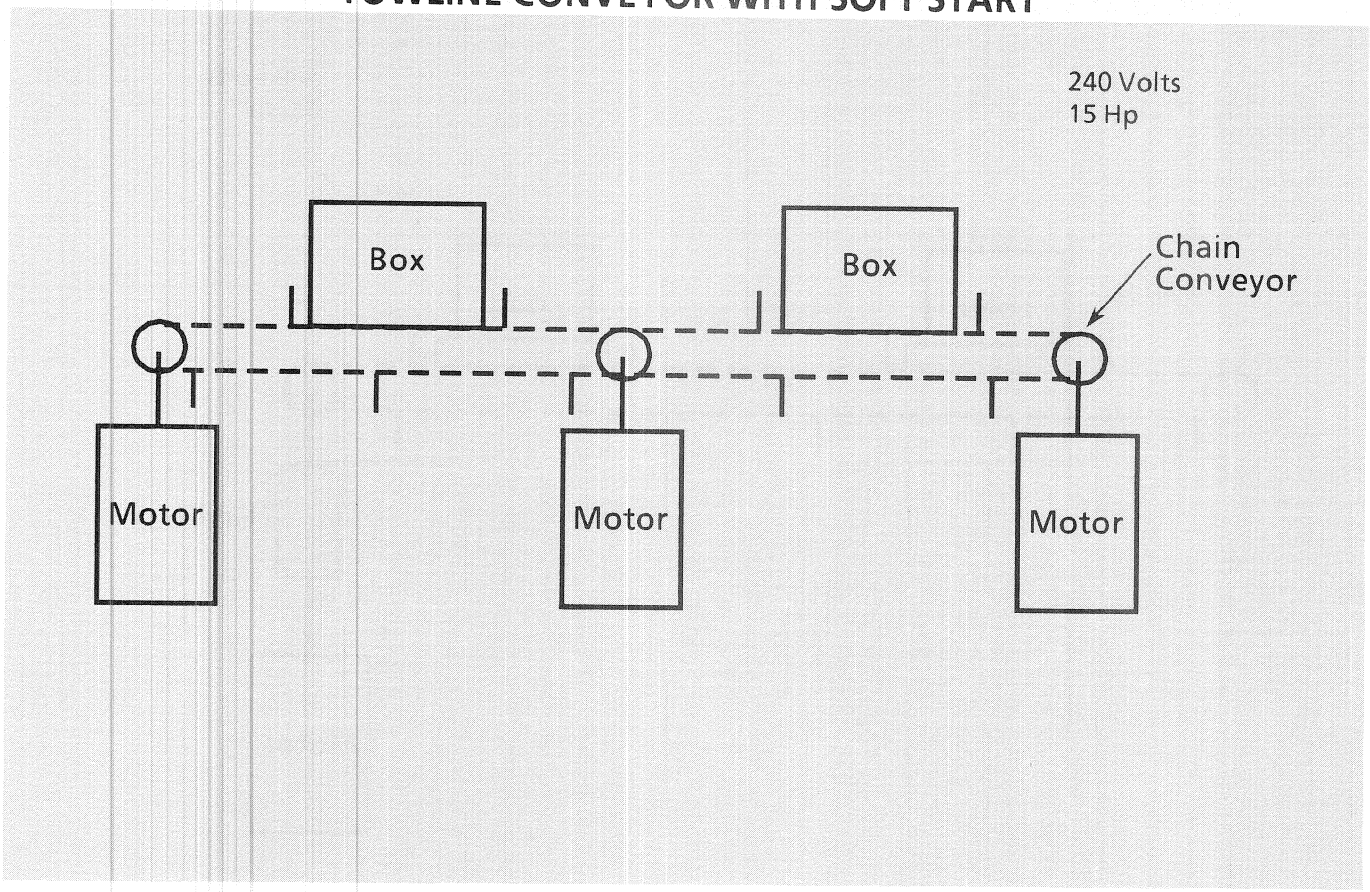

Problem: A towline conveyor in a freight house had three motors to drive the conveying system. Across-the-line starts caused damage to the conveyor and spilled freight on the conveyor. Occasionally the conveyor would stop fully loaded. An across-the-line start would then be needed to provide enough torque to accelerate the load.

Solution: The conveyor OEM installed a single SMC PLUS Controller to provide a smooth acceleration to the three motors. This reduced the starting torque of the motors and mechanical shock to the conveyor and load. In addition, the controller could be configured to a full voltage starter by changing DIP switches. This allowed the conveyor to accelerate when fully loaded. The OEM liked the SMC PLUS Controller because it treated the three motors as a single motor. Therefore, multiple soft starts were not required. Due to the self calibration, the controller could be used on multiple voltages. This minimized specification and warranty information.

TOWLINE CONVEYOR WITH SOFT START AND SOFT STOP OPTION

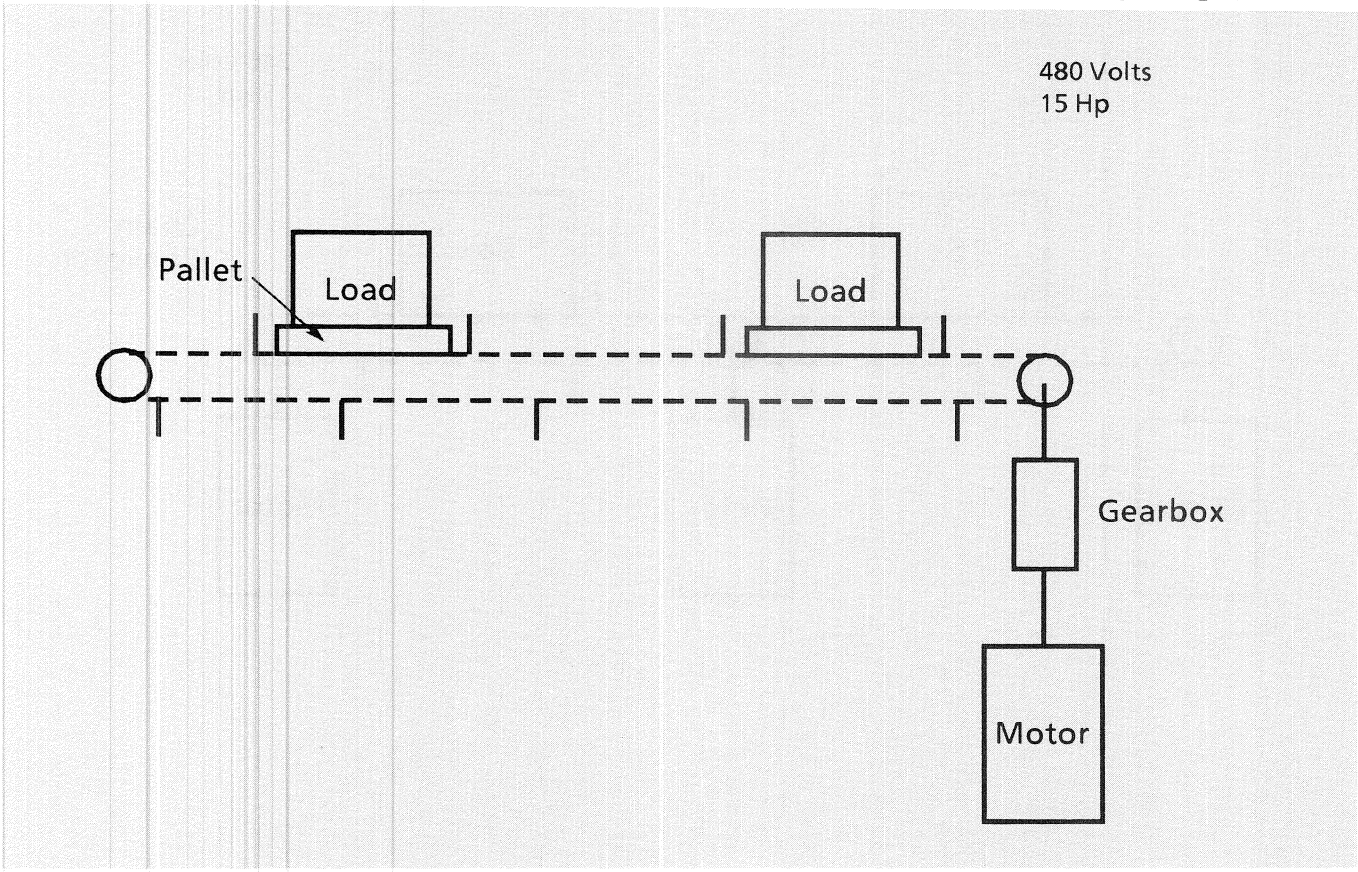

Problem: A towline conveyor at the end of a production line had frequent damage to the gear box due to the starting torque from across-the-line starting of the motor. There was also frequent spills on start and stop. Occasionally the conveyor needed to be started under heavy load. This application had a variety of starting requirements that other soft starts could not satisfy. The investment in a variable drive was not cost effective.

Solution: The SMC PLUS Controller with the soft stop option was installed as a retrofit to the existing across-the-line starter. The starting and stopping times were 15 seconds. The reduced torque starting decreased shock to the gear box and kept the load from shifting on start-up. The soft stop protected against load shifts while stopping. The kickstart was used to provide a pulse of current to break the load away when higher starting torque was required. (Other times the kickstart was set to zero.) The SMC PLUS Controller met the application requirements and was a cost effective solution.

CHAIN CONVEYOR WITH SOFT START

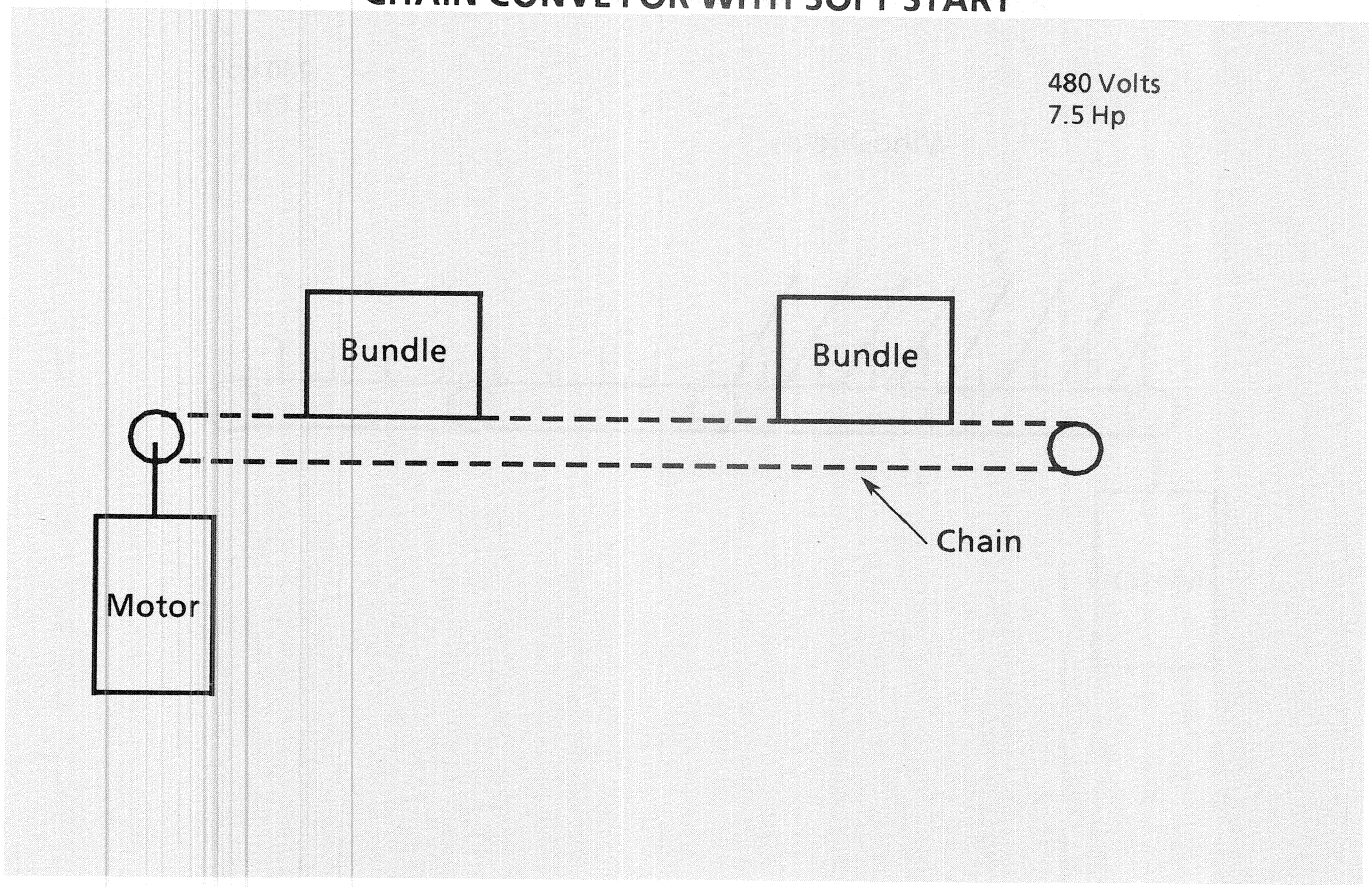

Problem: A chain conveyor was used to transport bundles of paper. Due to the high starting torque, the chain was breaking once per day. Maintenance of the conveyor caused interruptions in the production schedule and lost productivity. Line surges were also a frequent problem.

Solution: The SMC PLUS Controller was installed to reduce the starting torque. A 10 second Soft start was selected. This reduced the starting torque and mechanical shock to the chain. It was estimated that the SMC PLUS Controller paid for itself in three months due to reduced downtime. A MOV module was installed to suppress the voltage transients.

CHAIN CONVEYOR WITH SOFT STOP OPTION

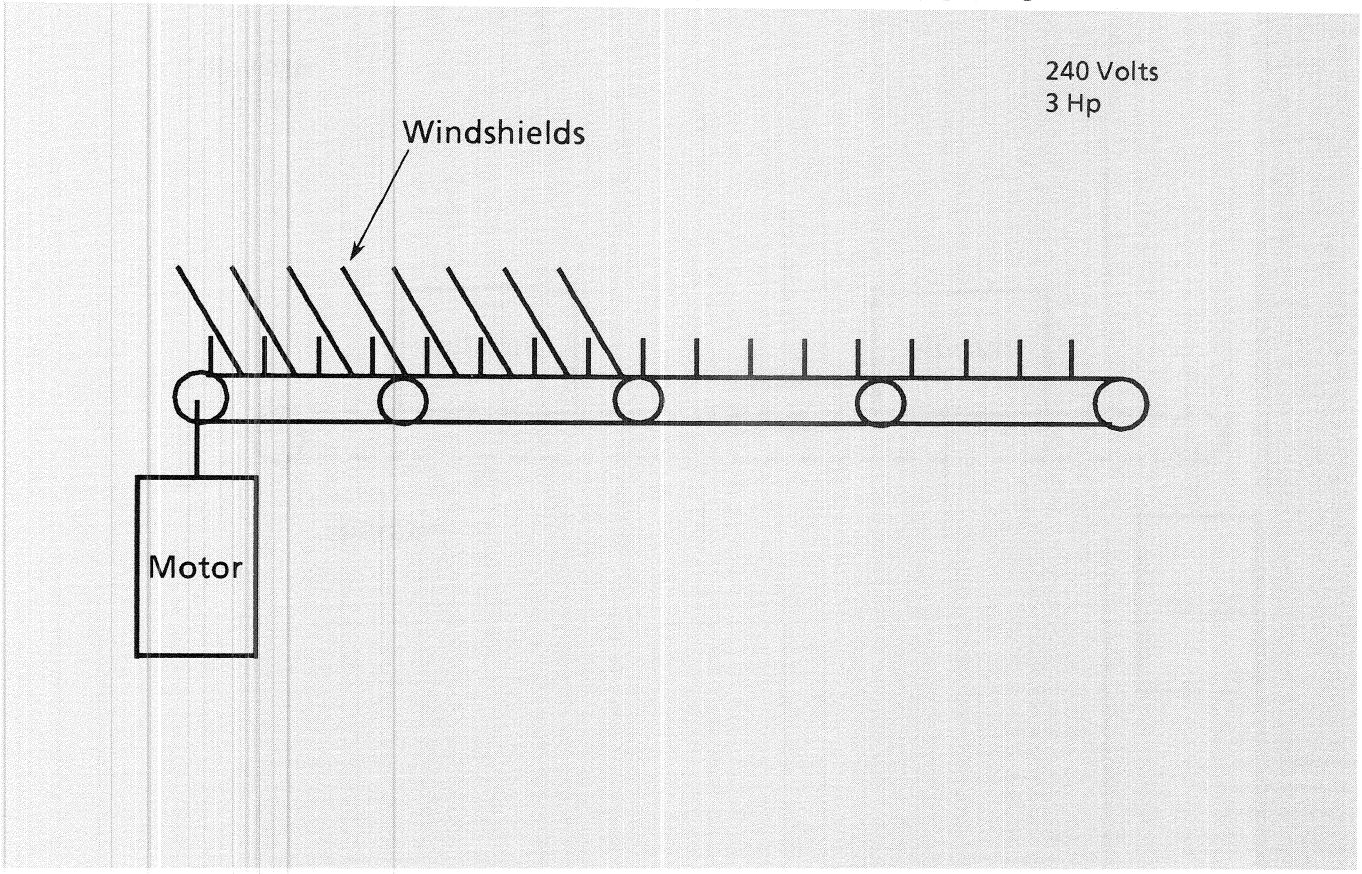

Problem: A chain conveyor was used to transport automobile windshields to a packaging area. The high starting torque would cause the load to shift damaging the windshields. The stopping of the conveyor also caused problems as the load decelerated quickly, causing shifting. An across-the-line starter was used in this application. As the cost of downtime was high, a modular unit was required for ease of maintenance.

Solution: The SMC PLUS Controller with soft stop option was installed. This reduced the starting torque and decreased product shift on start-up. The soft stop option extended the stopping time This brought the conveyor to a smooth stop. The SMC PLUS Controller has a plug-in control module and power poles. The logic could be bench adjusted for the desired ramp parameters and quickly replaced.

SHUTTLE CAR WITH ACCU-STOP™ OPTION

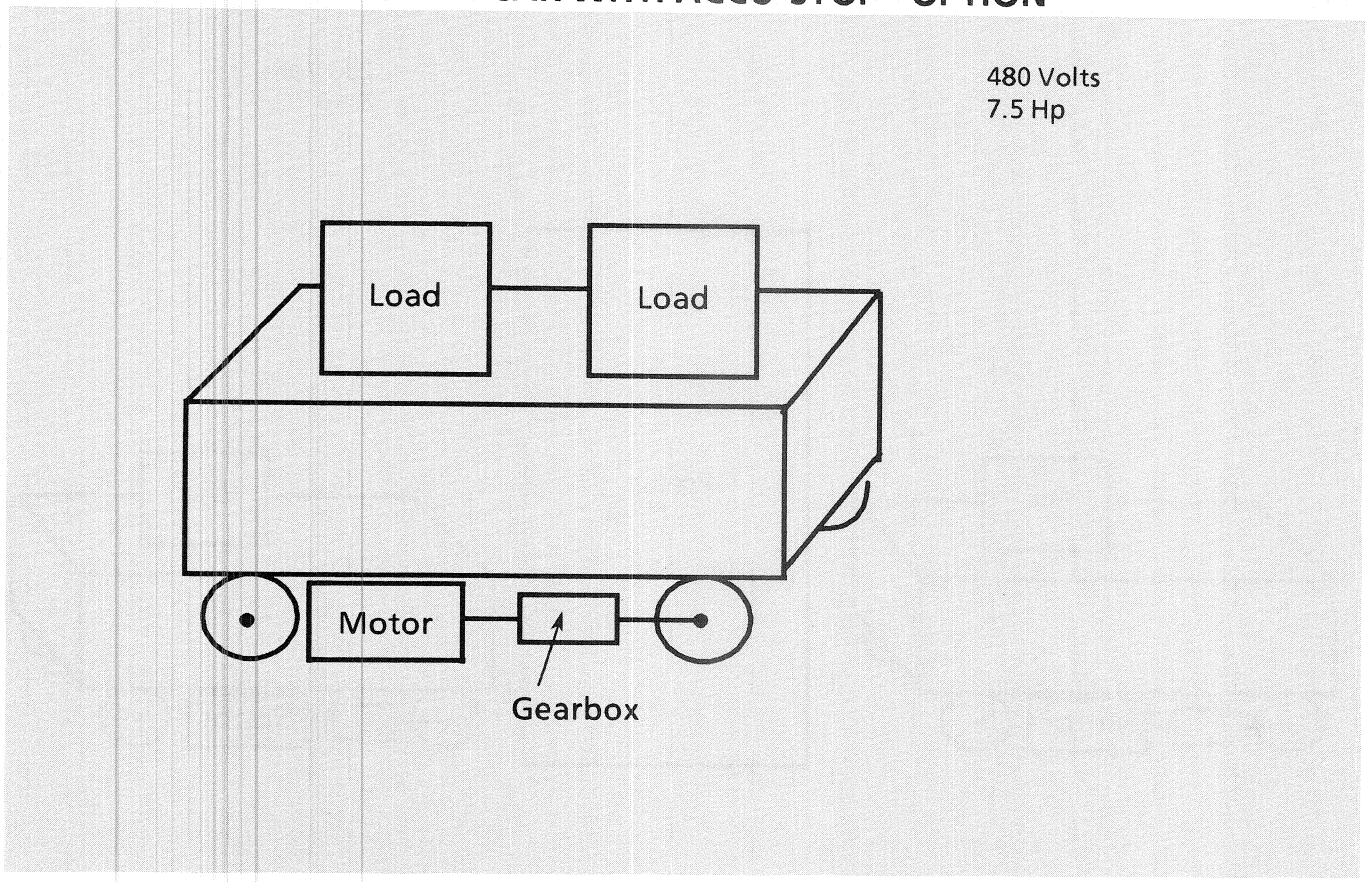

Problem: A shuttle car was used to transfer product in a material handling application. The OEM of the shuttle car was using a two speed motor with a mechanical brake. To prevent load shifts, the low speed was used when the shuttle was started . High speed was used for running. As the car approached the second station, the brake was applied. There was considerable brake wear. Since the brake was built into the motor, it was difficult and costly to replace. Other control devices were not cost effective.

Solution: The SMC PLUS Controller with the Accu-Stop option was installed with a single speed motor. The controller was set for a 15% speed to start the car followed by a ramp to full voltage. As the car neared the second station the speed would be brought down to the preset level. A braking action would then stop the car. The controller required approximately the same panel space as the multi-speed starter. The power wiring was simplified significantly. The new motor was a standard NEMA B stocked motor, greatly decreasing the cost. The SMC PLUS Controller was a cost effective solution for the application requirements.

DIE CHANGER WITH ACCU-STOP™ OPTION

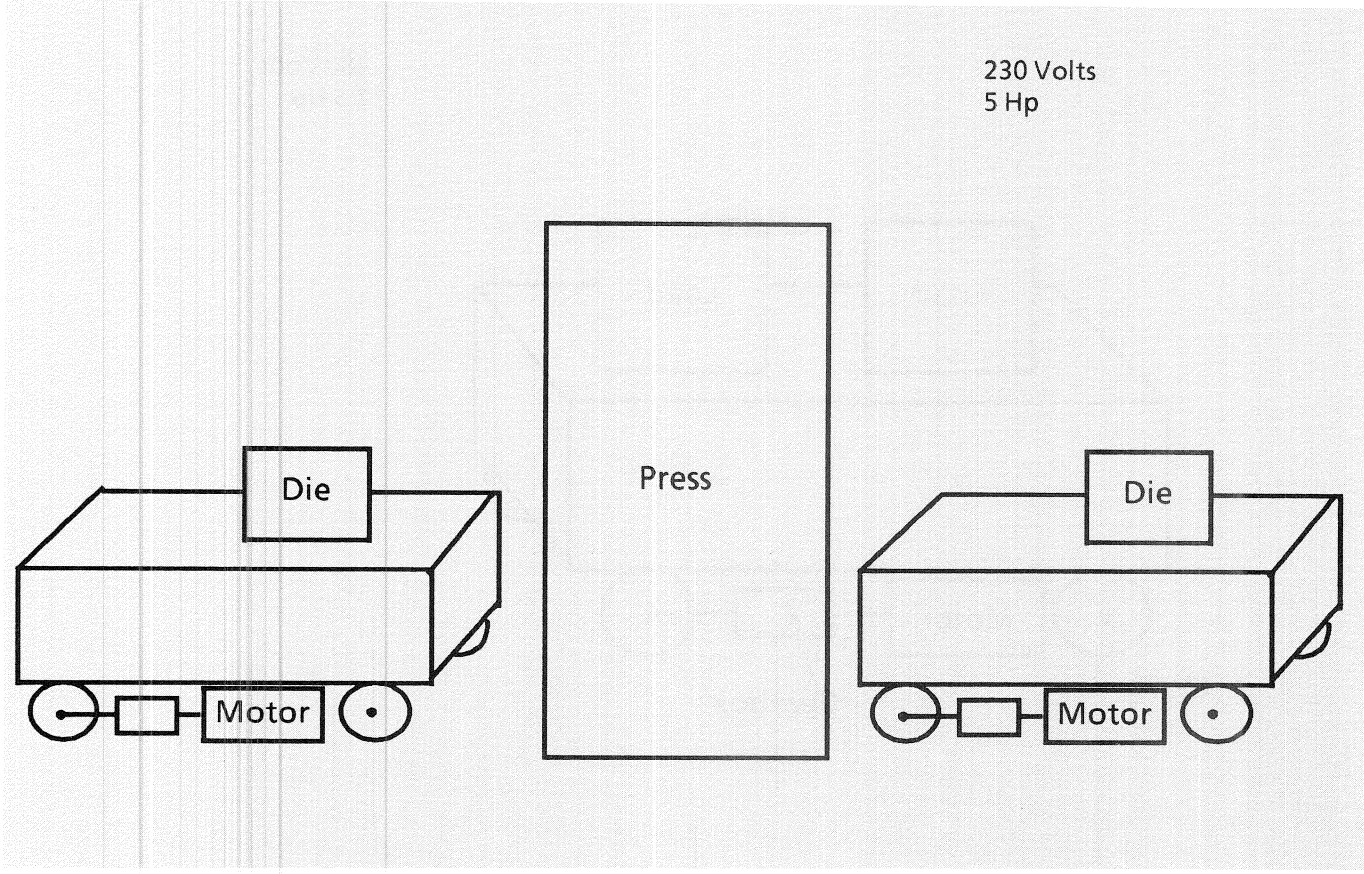

Problem: A die changer on a press required frequent jogging to move the die into position. An across-the-line starter was being used. As new operators controlled the press, the set-up time increased as more trial and error occurred in positioning. The application required a reduced speed as the die neared the press. The expense of a drive was not cost effective.

Solution: The SMC PLUS Controller with the Accu-Stop option was installed on both carts. The motor was soft started. As the cart neared the press, it decelerated to the preset speed (15%). A braking action would then stop the cart in the proper position. This reduced the time previously required to position the die. All operations were accomplished with the SMC PLUS Controller.

GRINDER WITH SOFT START

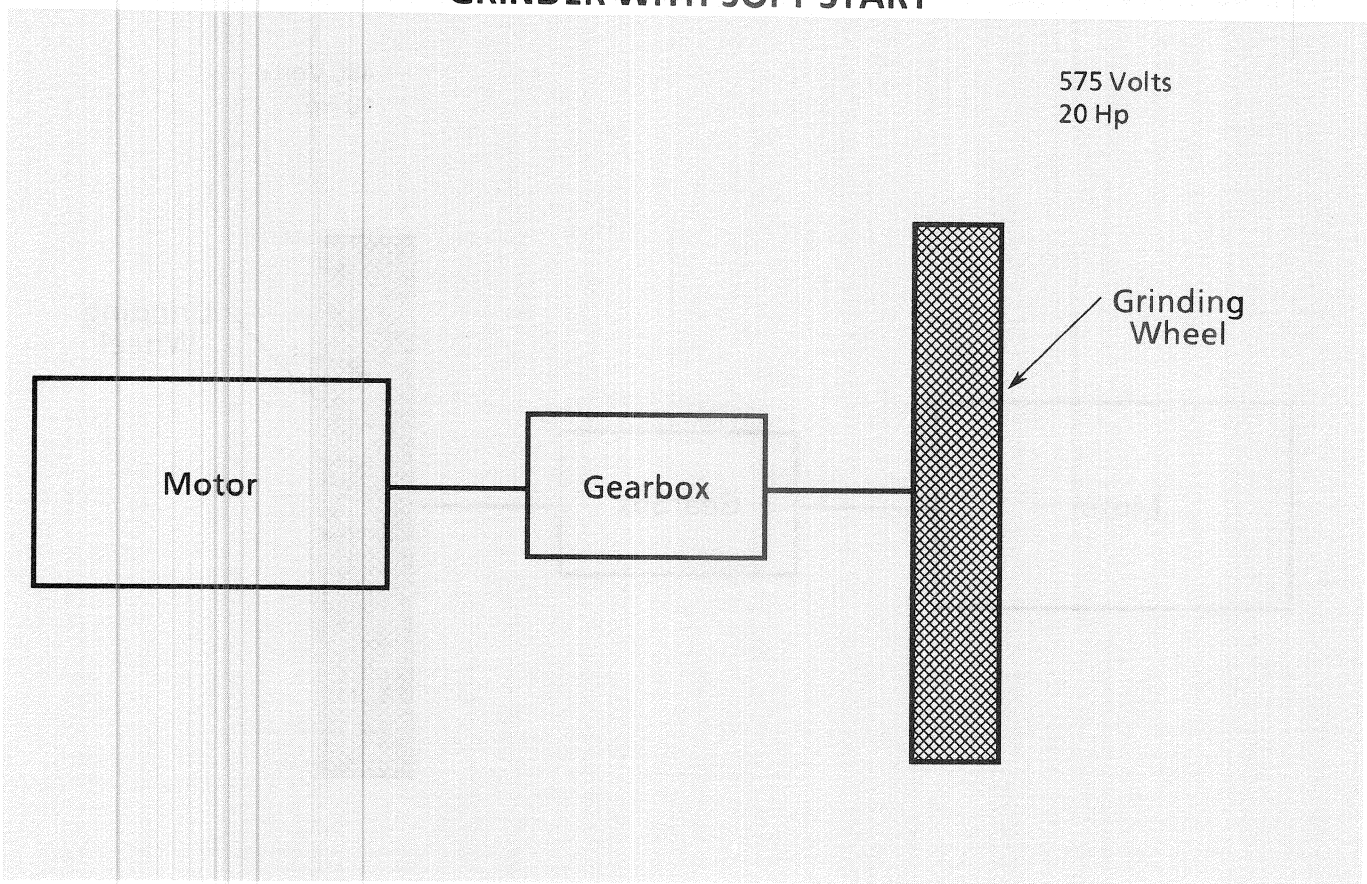

Problem: Due to the high starting torque developed from starting the motor across-the-line, the gears driving a grinding wheel were frequently damaged. This resulted in unscheduled downtime for repair. This application required a rugged device as vibration at the control panel was a problem.

Solution: The SMC PLUS Controller was installed and set for a 20 second acceleration time. This reduced the starting torque and the downtime for repairs on the grinder. In addition, the benefit of the Energy Saver was realized when the motor was running lightly loaded. The SMC PLUS Controller meets the same shock and vibration requirements as electromechanical devices, therefore it met the applications durability requirements.

GRINDER WITH SOFT START AND SMB™ SMART MOTOR BRAKING OPTION

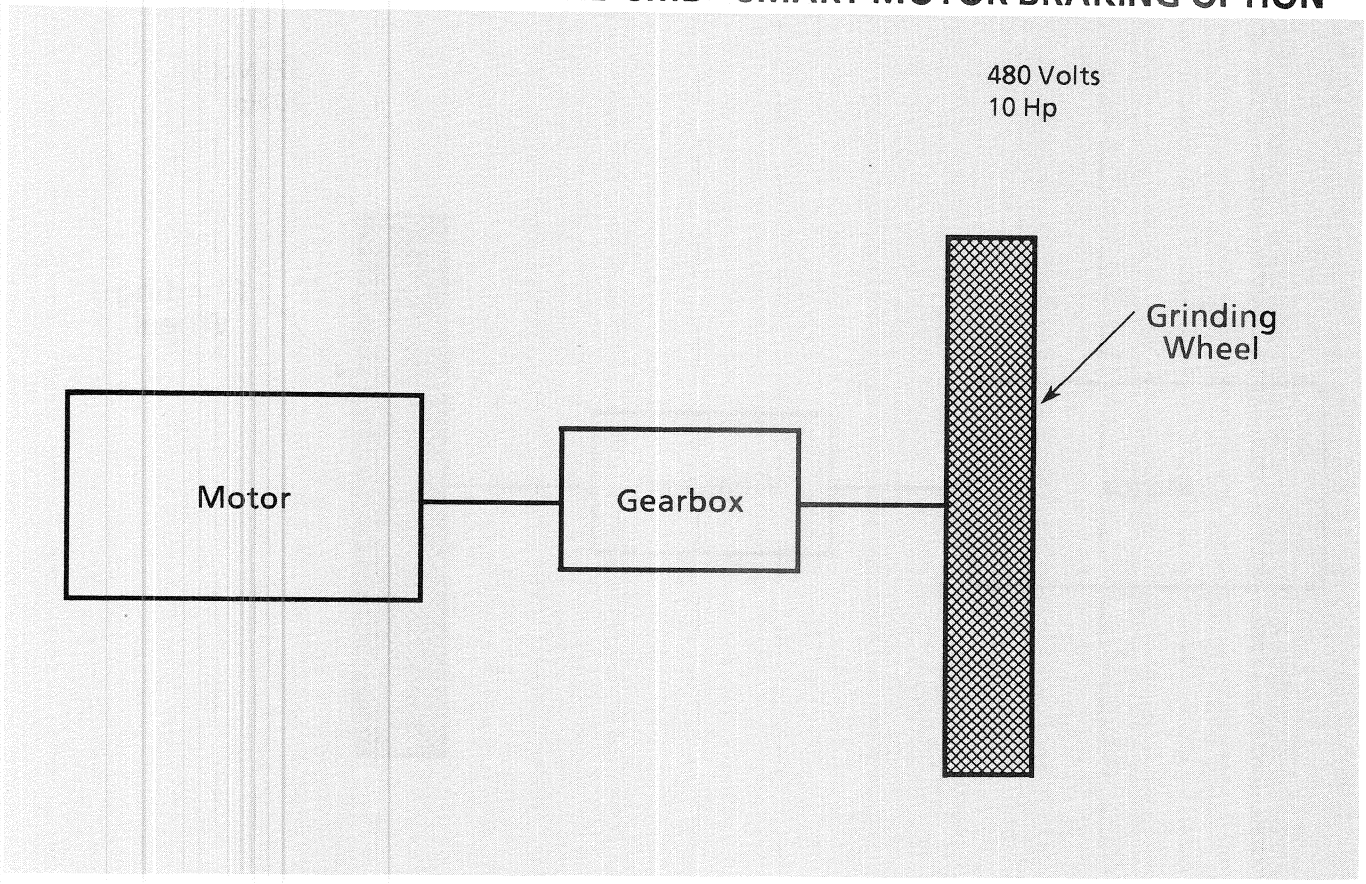

Problem: A grinder application used a soft start and a separate braking package to start and stop. This method was functionally acceptable, but required extra power wiring and contactors. Additional panel space and adjustments were required to interlock the soft start and brake. This meant a larger control panel which added cost to the package.

Solution: The SMC PLUS Controller with the SMB Smart Motor Braking option was installed. The soft start reduced the starting torque to protect against damage to the gear box. The SMB Smart Motor Braking option stopped the grinder quickly. This option required no additional panel space or power wiring. The power wiring, installation and adjustment of the SMC-PLUS Controller were easier than previous methods, so the cost of the control package was greatly reduced.

CRANE WITH SOFT START

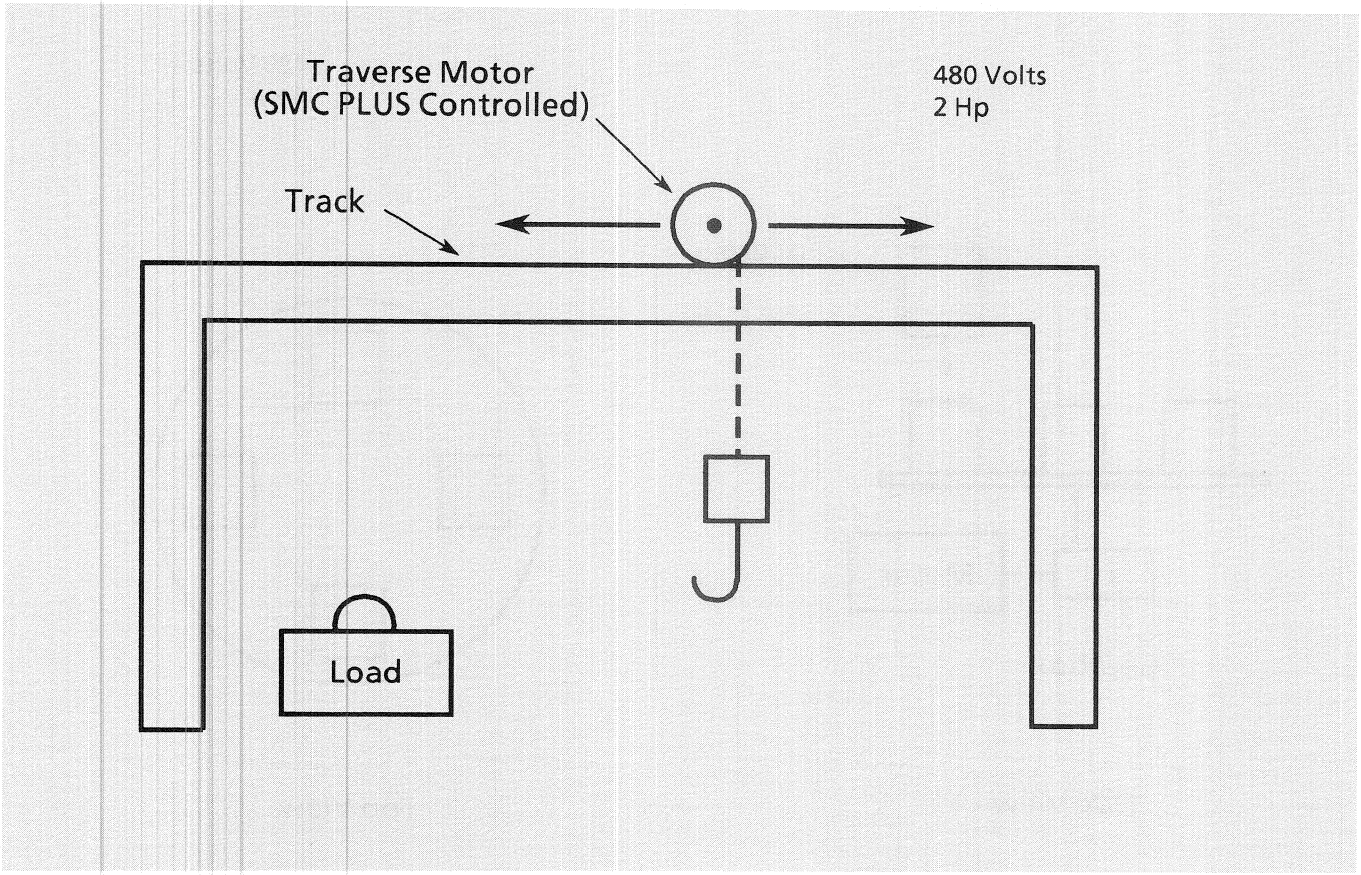

Problem: An overhead crane required frequent jogging due to adjustments in the traverse (horizontal) position. An across-the-line starter was used and this caused overshoot or undershoot when trying to position over a load. Contactors were frequently wearing out requiring replacement or repair. The application required a device where adjustments could be quickly set but would not be readily accessible to the operators.

Solution: The SMC PLUS Controller was installed in the application. By reducing the starting torque of the motor, this allowed the crane to be positioned effectively. This meant fewer starts to position the crane over the load. This solution reduced the maintenance required as well as improved the productivity of the crane. The ramp time was digitally set. reducing the trial and error of the set-up procedure. In addition, a door covers the adjustments. This guards against operator tampering.

ROTARY TABLE WITH ACCU-STOP™ OPTION

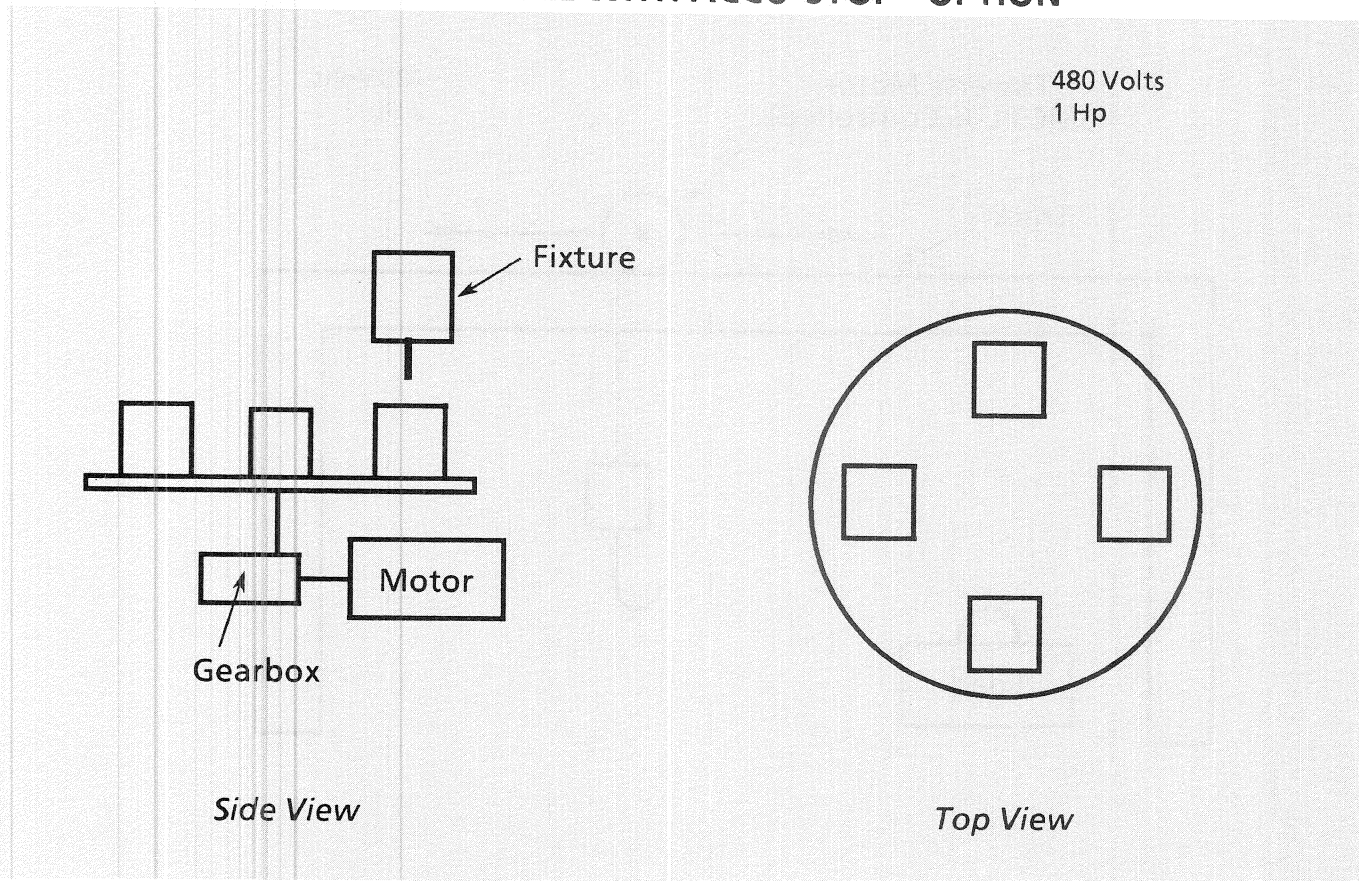

Problem: A machining process required a station change to attach a different tool. The part needed to be jogged into position before the tool could be changed. The tool was replaced approximately three times per hour. The customer did not require the functionality of more costly motor-positioning methods.

Solution: The SMC PLUS Controller with the Accu-Stop option was installed. This allowed the part to be positioned into the station at low speed. The controller was set to brake and stop the rotary table. This allowed positioning without jogging the motor. This solution increased the productivity of the rotary table station. The SMC PLUS Controller was a cost effective solution for the application.

BOTTLE FILLER WITH SOFT START AND SOFT STOP OPTION

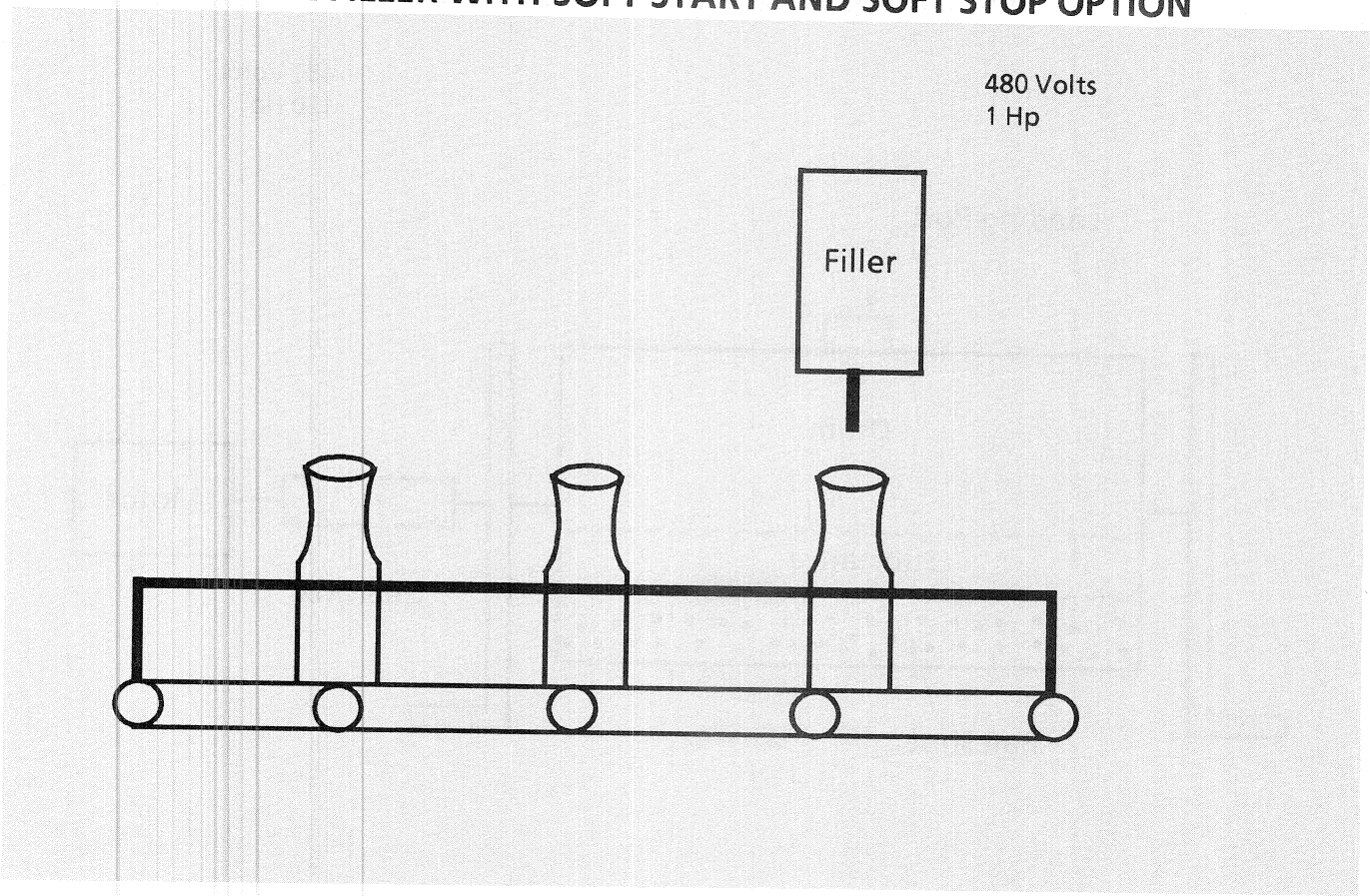

Problem: A bottle filler line had product spillage upon starting and stopping. An across-the-line starter was used to start the motor. In addition, the application required an auxiliary contact that would energize when the motor was up to speed. A cost effective device was desired.

Solution: The SMC PLUS Controller was installed and set for a 10 second soft start with a 20 second soft stop. This controlled the starting torque and bottle spill. The soft stop extended the stopping time smoothing load shift while stopping. The auxiliary contacts were configured to change state when the motor was up to speed.

BALL MILL WITH CURRENT LIMIT START

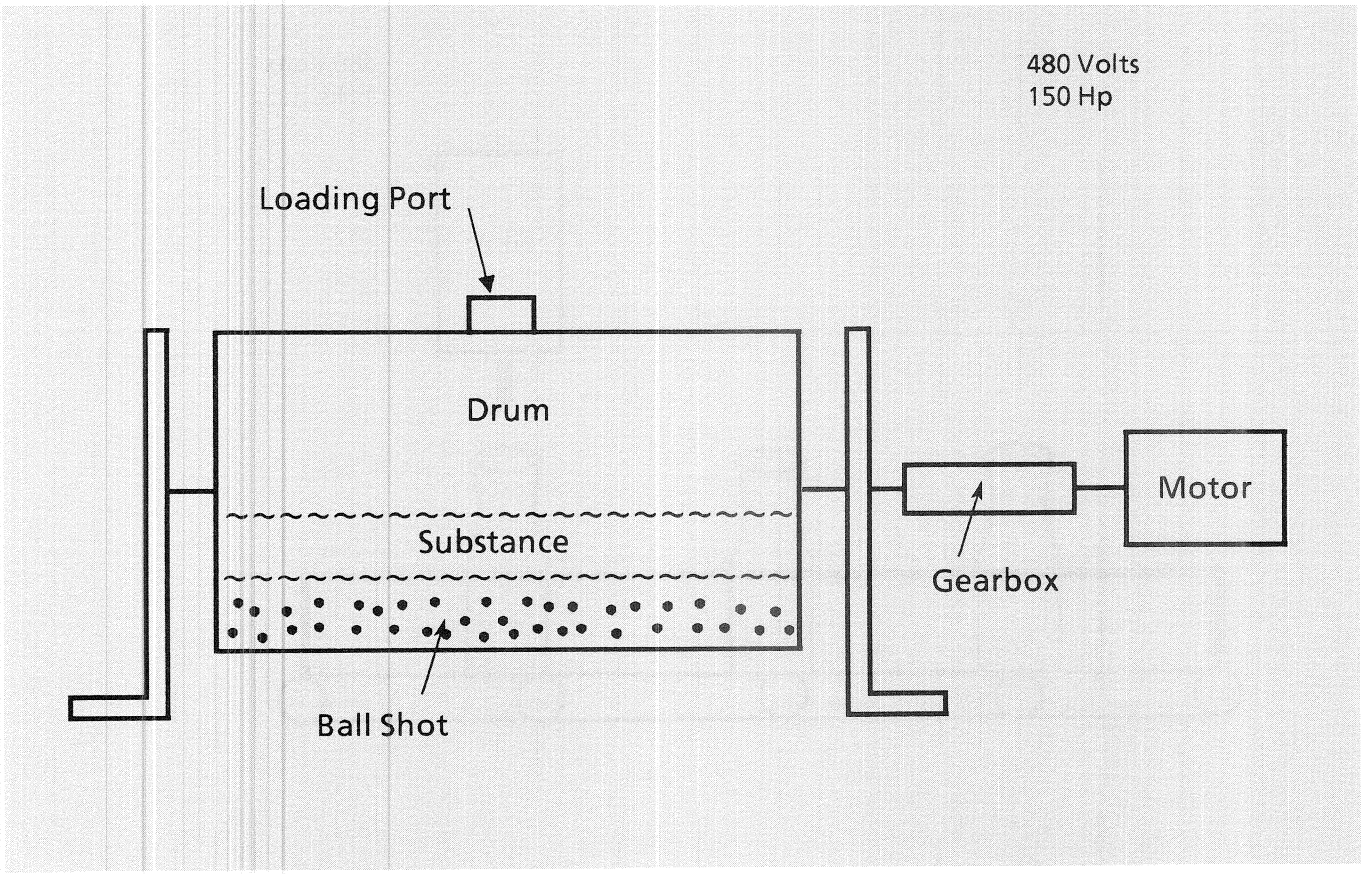

Problem: An across-the-line starter was used to start a motor in a ball mill application. This uncontrolled start was causing damage to the gear box. This resulted in maintenance downtime as well as potential loss of product (paint) being mixed. Line failures were also a frequent problem. The application required prestart and running line protection.

Solution: The SMC PLUS Controller was installed and set for a 30 second current limit start. This reduced the starting torque and damage to the gear box. In addition, the line diagnostics required in this application are standard in the SMC-PLUS Controller.

BALL MILL WITH SMB™ SMART MOTOR BRAKING OPTION

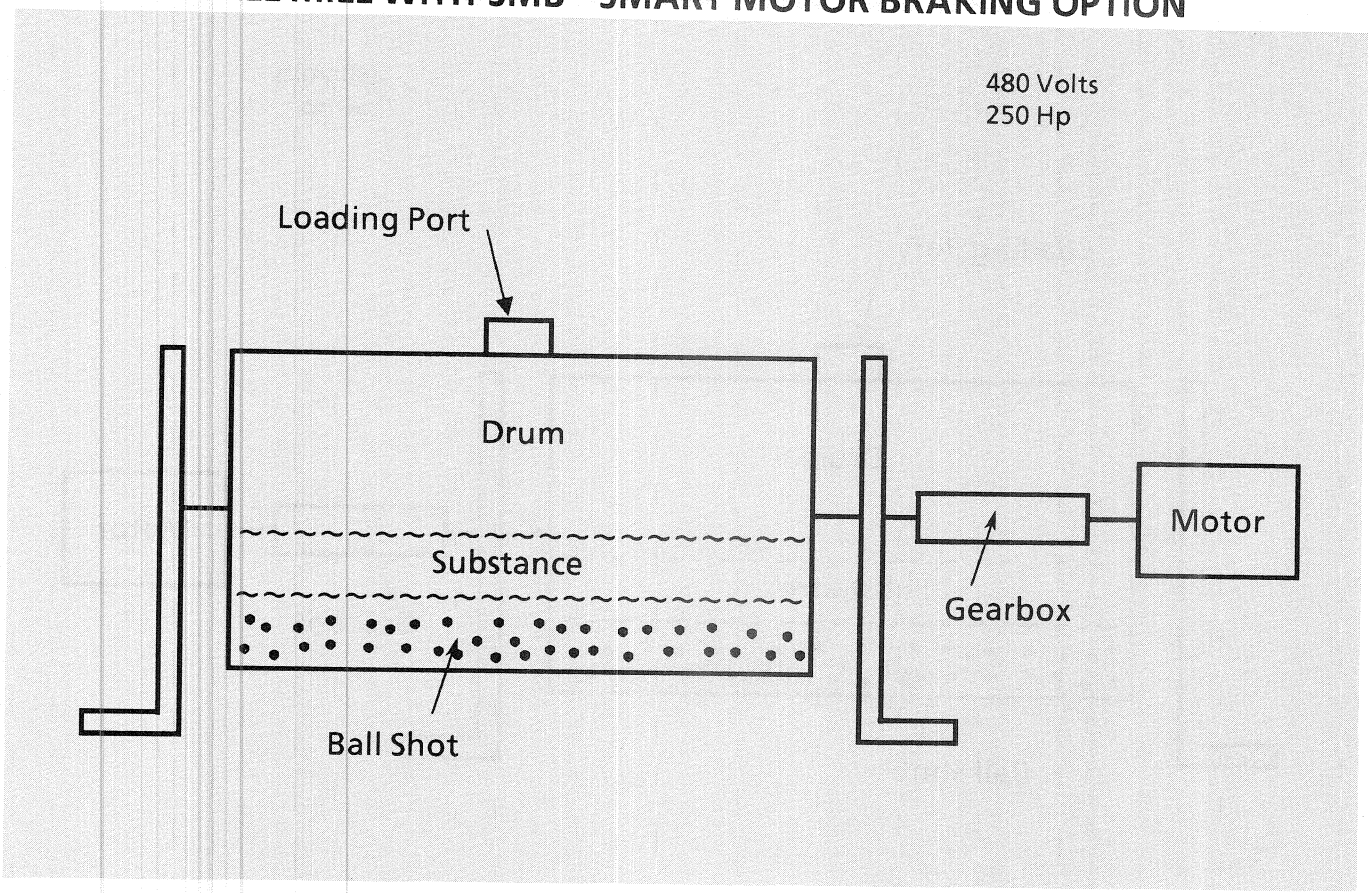

Problem: The gear box on a ball mill was being damaged due to across-the-line starts. This was causing extra maintenance time to keep the mill operating. The coast-to-stop time was approximately five minutes due to the high inertia of the load. The application required a soft start as well as a brake within a single package as panel space was at a premium.

Solution: The SMC PLUS Controller with the SMB Smart Motor Braking option was installed on the ball mill. The soft start reduced the shock to the gear box on start-up. The SMB Smart Motor Braking option reduced stopping time. This increased the productivity of the mill as loading was more efficient. The SMC PLUS Controller with SMB Smart Motor Braking option was mounted in the same space the previous contactor had been mounted (with ventilation). No additional power wiring was required and the space requirement was met.

BALL MILL WITH ACCU-STOP™ OPTION

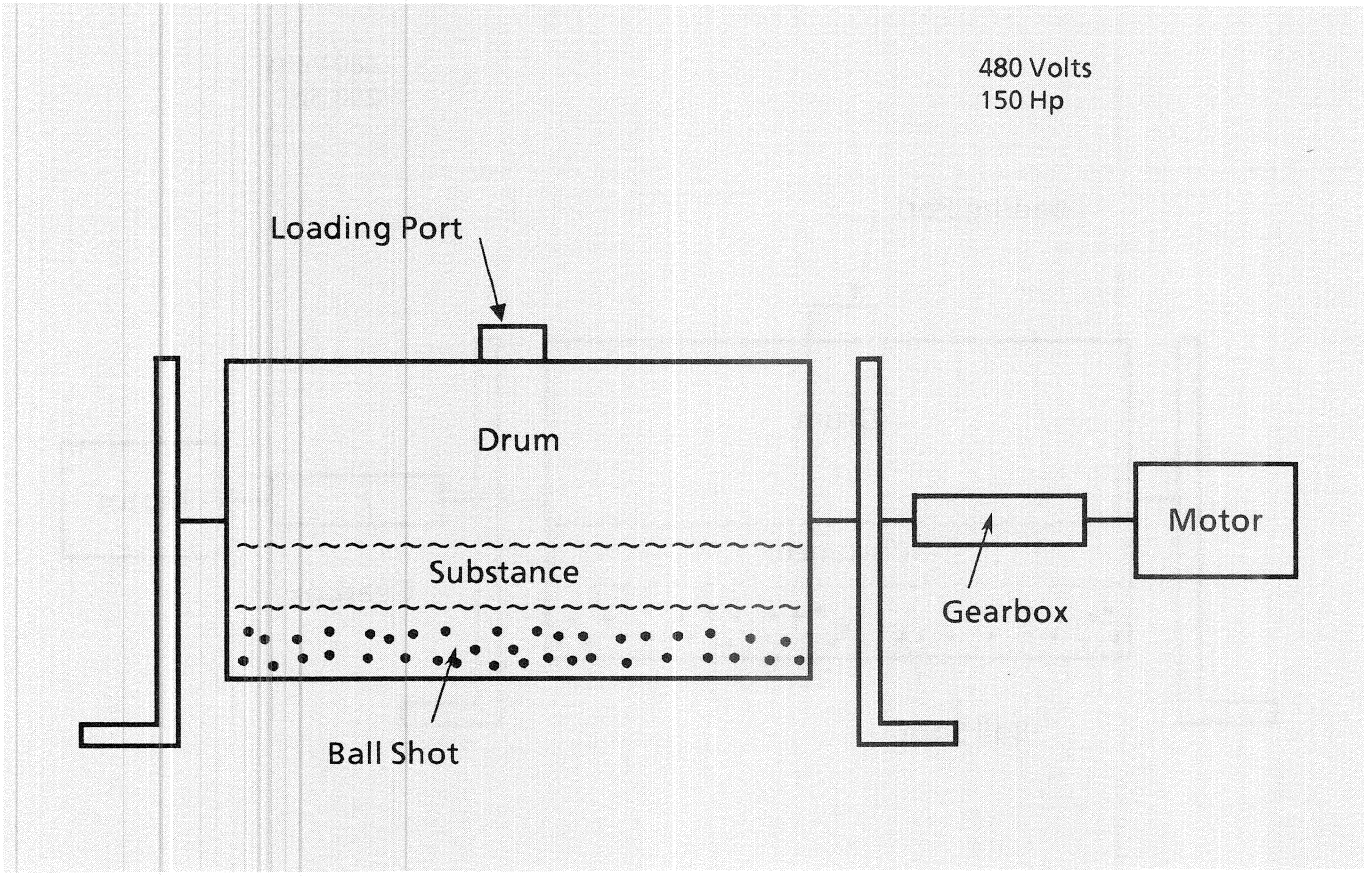

Problem: An across-the-line starter was used in a ball mill application. An electronic braking package was used to stop the mill. The mill had to be jogged excessively to position the port for loading. There were gear box problems caused by the starting torques. The application required a cost effective method to position the mill as well as control the stopping.

Solution: The SMC PLUS Controller with the Accu-Stop option was installed. The Preset Slow Speed option allowed the drum to be rotated into position at 15% speed. The Accu-Stop option stopped the drum with the load port in position. This greatly reduced the stopping time. The SMC PLUS Controller required less space and power wiring than the across-the-line contactor and braking package. This was a cost effective solution for the application.

Chapter 4 Applications Matrix

Description

Use this chapter to identify possible STC, SMC-2™, and SMC PLUS™ controller applications. This chapter contains an application matrix which will identify starting characteristics, as well as typical stopping features that may be used in various applications.

Mining and Metals

Applications	STC	SMC-2		SMC-PLUS								
		Soft Start	Current Limit	Soft Start	Current Limit	Kick Start	Soft Stop	Pump Control	Accu-Stop	Smart Motor Brake	Preset Slow Speed	Slow Speed with Brake
Roller Mills		X	X	X	X					X		X
Hammermills		X	X	X	X					X		X
Roller Conveyors	X	X		X			X					
Centrifugal Pumps	X	X	X	X	X			X				
Fans		X	X	X	X	X						
Tumbler		X	X	X	X				X	X	X	X
Rock Crusher		X	X	X	X							
Dust Collector		X	X	X	X							
Chillers		X	X	X	X							
Compressor		X	X	X	X							
Wire Draw Machine		X	X	X	X	X						
Belt Conveyors	X	X	X	X	X	X	X		X		X	
Shredder		X	X	X	X							
Grinder		X	X	X	X					X		X
Slicer		X	X	X	X	X						

Food Processing

Applications	STC	SMC-2		SMC-PLUS								
		Soft Start	Current Limit	Soft Start	Current Limit	Kick Start	Soft Stop	Pump Control	Accu-Stop	Smart Motor Brake	Preset Slow Speed	Slow Speed with Brake
Centrifugal Pumps	X	X	X	X	X			X				
Palletizers	X	X		X			X					
Mixers	X	X	X	X	X	X					X	
Agitators		X		X								
Centrifuges			X		X					X		X
Conveyors	X	X		X		X	X		X			
Fans	X	X	X	X	X							
Bottle Washers	X	X		X			X					
Compressors		X	X	X	X							
Hammermill		X	X	X	X							
Separators		X	X	X	X							
Dryers	X	X	X	X	X							
Slicers		X	X	X	X	X						

Pulp and Paper

Applications	STC	SMC-2		SMC-PLUS								
		Soft Start	Current Limit	Soft Start	Current Limit	Kick Start	Soft Stop	Pump Control	Accu-Stop	Smart Motor Brake	Preset Slow Speed	Slow Speed with Brake
Compressors		X	X	X	X							
Conveyors	X	X	X	X	X	X	X		X		X	
Trolleys	X	X		X			X		X		X	
Dryers	X	X	X	X	X							
Agitators		X	X	X	X							
Centrifugal Pumps	X	X	X	X	X			X				
Mixers	X	X	X	X	X							
Fans	X	X	X	X	X							
Re-Pulper		X	X	X	X	X						
Shredder		X	X	X	X							

Petrochemical

Applications	STC	SMC-2		SMC-PLUS								
		Soft Start	Current Limit	Soft Start	Current Limit	Kick Start	Soft Stop	Pump Control	Accu-Stop	Smart Motor Brake	Preset Slow Speed	Slow Speed with Brake
Centrifugal Pumps	X	X	X	X	X			X				
Extruders		X	X	X	X							
Screw Conveyors	X	X	X	X	X	X						
Mixers		X	X	X	X						X	
Agitators		X	X	X	X							
Compressors		X	X	X	X							
Fans	X	X	X	X	X							
Ball Mills		X	X	X	X				X	X		X
Centrifuge		X	X	X	X					X		X

Transportation and Machine Tool

Applications	STC	SMC-2		SMC-PLUS								
		Soft Start	Current Limit	Soft Start	Current Limit	Kick Start	Soft Stop	Pump Control	Accu-Stop	Smart Motor Brake	Preset Slow Speed	Slow Speed with Brake
Material Handling Conveyors	X	X	X	X	X	X	X		X		X	
Ball Mills		X	X	X	X				X	X	X	X
Grinders		X	X	X	X					X		X
Centrifugal Pumps	X	X	X	X	X			X				
Trolleys	X	X		X			X		X		X	
Presses		X	X	X	X					X		X
Fans	X	X	X	X	X							
Palletizers	X	X	X	X	X		X		X		X	
Compressors		X	X	X	X							
Roller Mill	X	X	X	X	X					X		X
Die Changer		X		X					X			
Rotary Table		X		X					X		X	

OEM Specialty Machines

Applications	STC	SMC-2		SMC-PLUS								
		Soft Start	Current Limit	Soft Start	Current Limit	Kick Start	Soft Stop	Pump Control	Accu-Stop	Smart Motor Brake	Preset Slow Speed	Slow Speed with Brake
Centrifugal Pumps	X	X	X	X	X			X				
Washers	X	X	X	X	X				X	X	X	X
Conveyors	X	X	X	X	X	X	X		X	X	X	X
Power Walks	X	X	X	X	X		X					
Fans	X	X	X	X	X							
Twisting/ Spinning Machine	X	X	X	X	X							

Lumber and Wood Products

Applications	STC	SMC-2		SMC-PLUS								
		Soft Start	Current Limit	Soft Start	Current Limit	Kick Start	Soft Stop	Pump Control	Accu-Stop	Smart Motor Brake	Preset Slow Speed	Slow Speed with Brake
Chipper		X	X	X	X					X		X
Circular Saw		X	X	X	X					X		X
Bandsaw		X	X	X	X					X	X	X
Edger		X	X	X	X							
Conveyors	X	X	X	X	X	X	X		X		X	
Centrifugal Pumps	X	X	X	X	X			X				
Compressors		X	X	X	X							
Fans	X	X	X	X	X							
Planers		X	X	X	X							
Sander		X	X	X	X				X	X	X	X
Debarker		X	X	X	X					X		X

Water/Wastewater Treatment and Municipalities

Applications	STC	SMC-2		SMC-PLUS								
		Soft Start	Current Limit	Soft Start	Current Limit	Kick Start	Soft Stop	Pump Control	Accu-Stop	Smart Motor Brake	Preset Slow Speed	Slow Speed with Brake
Centrifugal Pumps	X	X	X	X	X			X				
Centrifuge		X	X	X	X					X		X
Fans	X	X	X	X	X							
Compressors		X	X	X	X							

Chapter 5 Special Application Considerations

Smart Motor Controllers in Drive Applications

The Smart Motor Controller can be installed in starting and stopping control applications. A variable frequency drive must be installed when speed variation is required during run.

Use of Protective Modules

A protective module (see Figure 5.1) containing metal oxide varistors (MOVs) and capacitors can be installed to protect the power components from electrical transients and/or electrical noise ①. The protective modules clip transients generated on the lines and prevent such surges from damaging the SCRs. The capacitors in the protective modules are used to shunt noise energy away from the Smart Motor Controller electronics.

Figure 5.1
Protective Modules

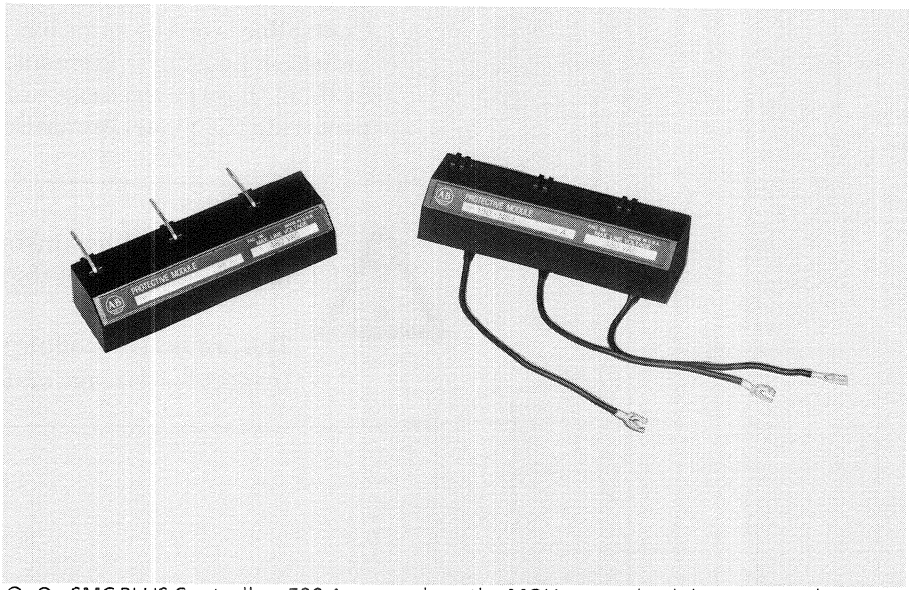

① On SMC PLUS Controllers 500 Amps and up, the MOV protection is incorporated as standard.

Use of Protective Modules (continued)

There are two general situations that may occur which would indicate the need for utilizing the protective modules.

1. Transient spikes may occur on the lines feeding the Smart Motor Controller (or feeding the load from the Smart Motor Controller). Lightning can cause spikes. Spikes are also created on the line when devices are attached with current-carrying inductances that are open-circuited. The energy stored in the magnetic field is released when the contacts open the circuit. Examples of these are lightly loaded motors, transformers, solenoids, and electromechanical brakes.
2. The second situation arises when the Smart Motor Controller is installed on a system which has fast-rising wavefronts present, although not necessarily high peak voltages. Lightning strikes can cause this type of response. Additionally, if the Smart Motor Controller is on the same bus as other SCR devices, (AC/DC drives, induction heating equipment, or welding equipment) the firing of the SCRs in those devices can cause noise. This high frequency noise can penetrate the Smart Motor Controller through stray capacitance.



WARNING: When installing or inspecting the protective module, disconnect the controller from the power source.

The protective module should be checked periodically. Inspect for damage or discoloration. Replace if necessary.

Current Limit Fuses (Overcurrent Protection of SCRs)

The heat energy of high-level fault currents can quickly destroy an SCR. As illustrated, a current limit fuse limits peak let thru current (Ip) to a level which is a fraction of the potential available short circuit peak current.

The fast response to the buildup of short circuit current and the quickly decaying short circuit current as the fuse suppresses internal arcing together can limit the I^2t let thru values substantially lower than the I^2t withstand of the semiconductor device. The fuse clearing time decreases with the higher available short circuit currents.

The SCR fuses are coordinated with the SCRs used in the SMC PLUS controller. They are sized to clear a short circuit fault in typically three milliseconds or less.

These SCR fuses are sized to operate the controller at 60-70% of the fuse rating to avoid deterioration of the fuse. The suggested fuse for the particular current rated device should be used to allow proper protection of the SCRs. Fuses which are undersized will cause nuisance trips and fuse replacement costs.

The fast acting SCR fuses normally do not provide branch circuit protection. Branch circuit protection in accordance with applicable electrical codes is required even though fast acting current limiting SCR fuses are used.

Figure 5.2
Clearing Time of Fuse

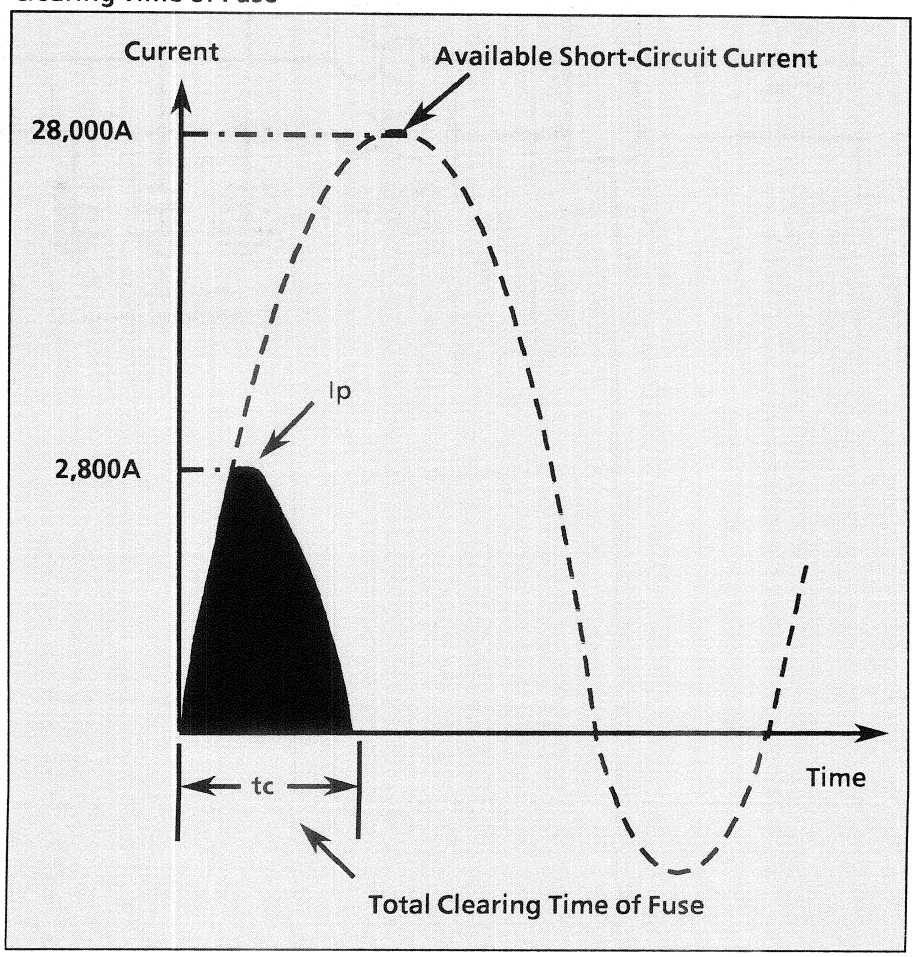

Motor Overload Protection

When coordinated with the proper short circuit protection, the overload relay is intended to protect the motor, motor controller and power wiring against overheating due to excessive overcurrent. Bimetallic or eutectic overload devices should be used and selected similar to electro-mechanical starters. Heater elements must be based on motor nameplate data, which includes the full load current, the service factor, and/or the motor classification by application and temperature rise.

In many applications, depending upon the motor, class 20 overloads may be required to allow enough acceleration time before an overload trip. Therefore, it may be desirable to use an overload device where the element can be changed if the motor and application will allow a different class element.

Power Factor Capacitors

The controller may be installed on a system with power factor correction capacitors. These must be installed on the line side. This must be done to prevent damage to the SCRs in the Smart Motor Controller.

Figure 5.3
Power Factor Capacitors

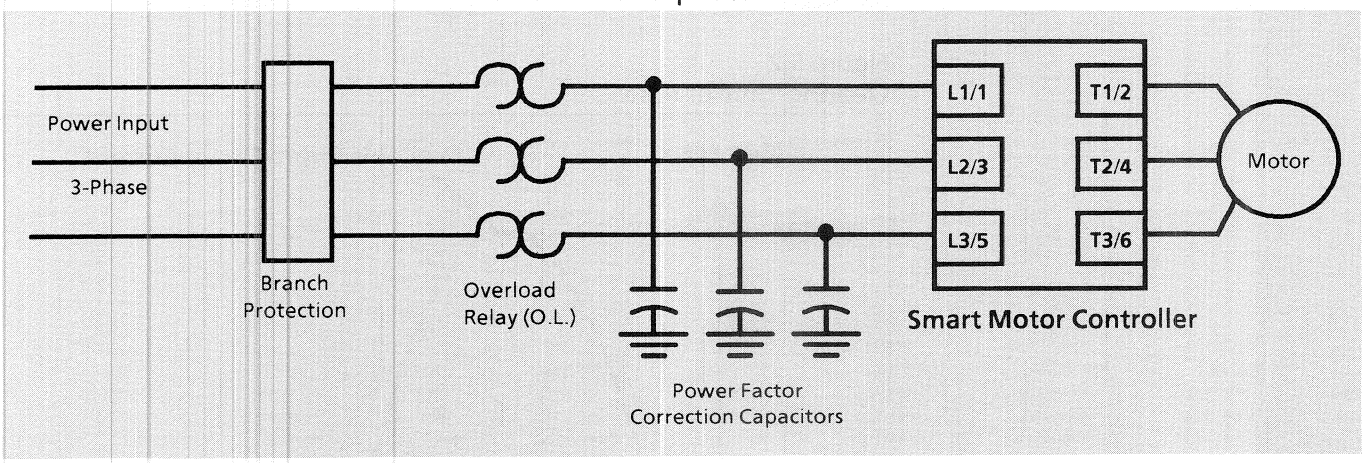

Power Factor Capacitors (continued)

If an isolation contactor is used, it is recommended that the power factor capacitors be installed ahead of the isolation contactor (see Figure 5.4).

Figure 5.4
Power Factor Capacitors with Isolation Contactor

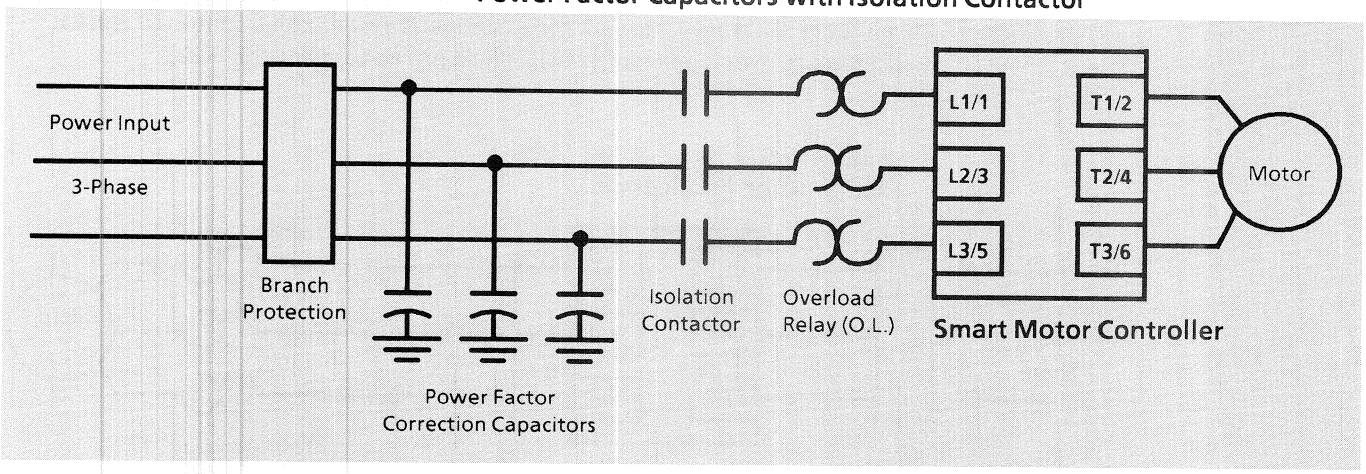

When discharged, a capacitor has essentially zero impedance. For switching sufficient impedance should be connected in series with the capacitor bank to limit the inrush current. A method of limiting the surge current is to add inductance in the capacitance conductors. This can be accomplished by putting turns or coils in the power connections to the capacitors.

- 600-480 volts - 6 inch diameter coil, 8 loops
- 250 volts - 6 inch diameter coil, 6 loops

Care should be used in mounting the coils so that they are not stacked directly on top of each other eliminating the chance of a canceling effect. Also, the coils should be mounted on insulated supports away from metal parts to prevent induction heating.

Multimotor Applications

The Smart Motor Controller will operate with more than one motor connected. To size the controller, add the total nameplate amperes of all of the connected loads. Both the stall and the energy saver features should be turned off. (If the separate motor loads are not mechanically coupled, it is possible for one motor to be lightly loaded, and if the energy saver is activated, this may cause the heavily loaded motor to stall.) Separate overloads would still be required to meet the NEC.

Figure 5.5
Multimotor Application

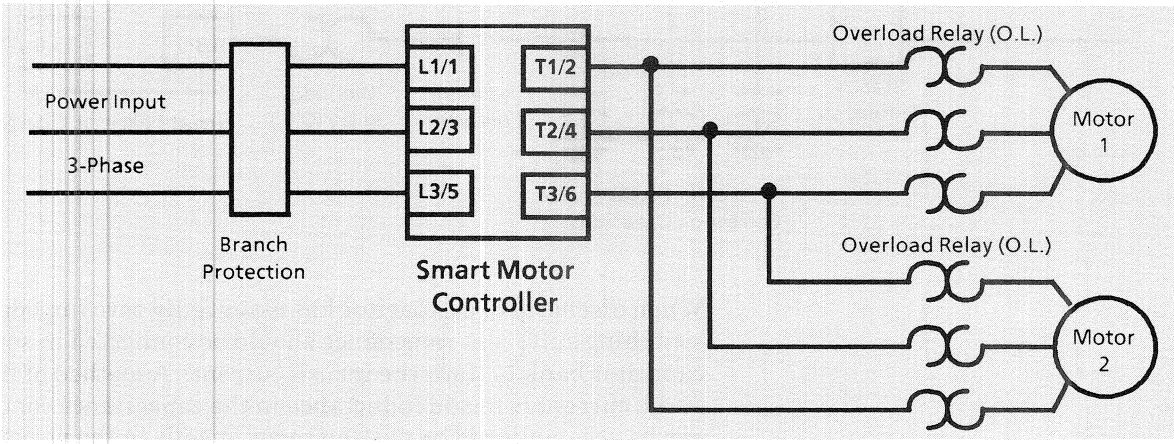

Wound Rotor Motors

The Smart Motor Controller may be applied to wound rotor motors. A wound rotor motor depends upon external resistors to develop high starting torque.

It is recommended that the slip rings be shorted during start-up. With the slip rings shorted, starting torque is very low even with full voltage applied to the motor. The torque will be reduced even further using the Smart Motor Controller as it reduces the voltage.

It is possible to develop enough starting torque using the controller and a single step of resistors. The resistors are placed in the circuit during starting and then removed once the motor reaches synchronous speed. Sizing of the resistors will depend upon the starting torque required based on the load of the motor.

Altitude De-Rating

Due to decreased efficiency of fans and heatsinks it is necessary to de-rate the Smart Motor Controller above 6,500 feet (approximately 2,000 meters). When using the controller above 6,500 feet use the next size device to guard against potential overtemperature trips.

Isolation Contactor

When installed with branch circuit protection and an overcurrent device, the Smart Motor Controllers are compatible with the National Electric Code (NEC). When not using an isolation contactor, hazardous voltages are present at the load terminals of the power module even when the controller is turned off. Warning labels must be attached to the motor terminal box, the controller enclosure and the control station.

Allen-Bradley recommends using an isolation contactor to provide automatic electrical isolation of the controller and motor circuit when the controller is shut down either manually by pressing the stop button or automatically by the occurrence of abnormal conditions (such as a motor overload relay trip).

The isolation contactor under normal conditions only carries the load current. During start the isolation contactor is energized before the SCRs are gated "on." While stopping, the SCRs are gated "off" before the isolation contactor is de-energized. The isolation contactor is not making or breaking the load current.

Typical Connection with Isolation Contactor

Figure 5.6
Typical Connection Diagram with Isolation Contactor

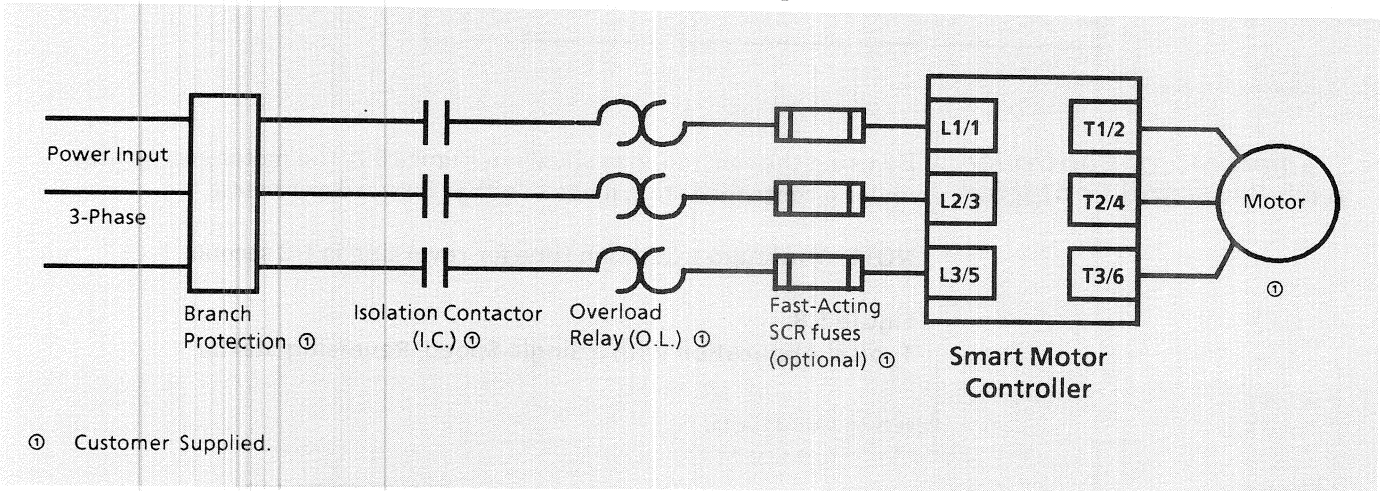

Smart Motor Controller with By-Pass Contactor

A controlled start and stop is provided by wiring the controller as shown in Figure 5.7. When the motor is up to speed, the by-pass contactor is "pulled in" for run. The by-pass mode reduces the amount of heat produced by the SCRs.

Figure 5.7
Typical Application Diagram of a By-Pass Contactor

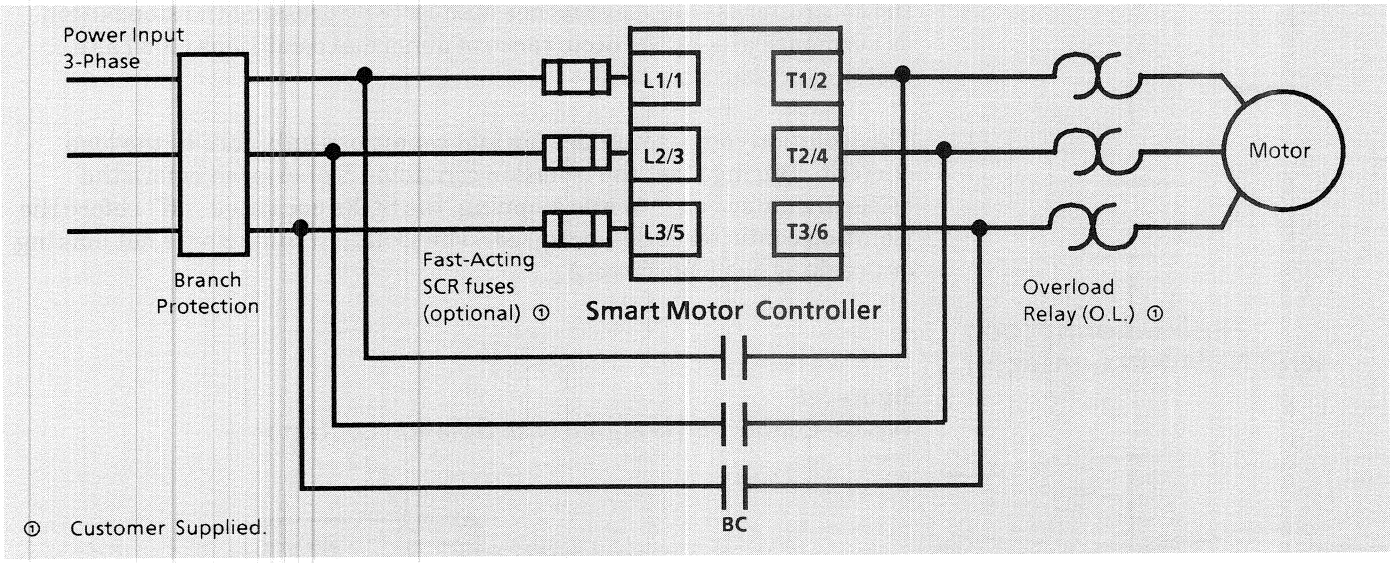

Smart Motor Controller with Reversing Contactor

By using the controller as shown in Figure 5.8, the motor accelerates under a controlled start mode in either forward or reverse.

NOTE: Minimum transition time for reversing is 1/2 second.

Figure 5.8
Typical Application with a Single Speed, Reversing Starter

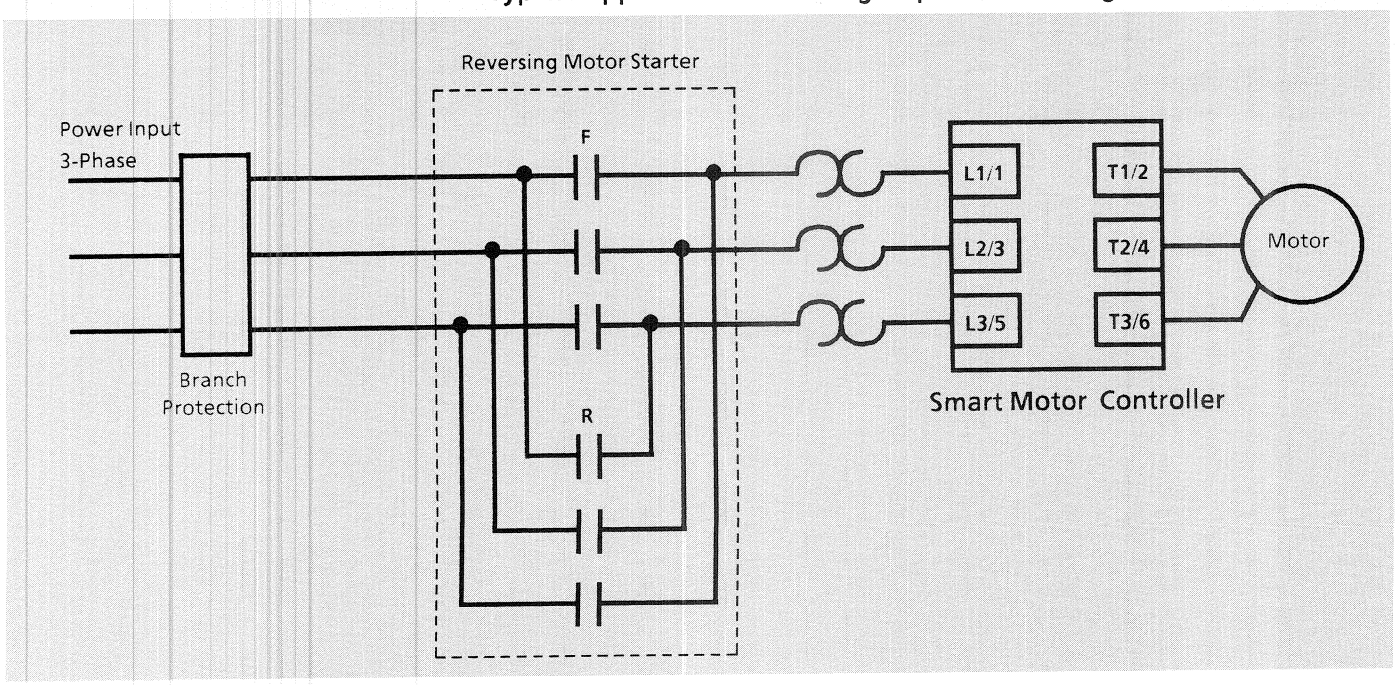

Smart Motor Controller as a By-Pass to an AC Drive

By using the controller as shown in Figure 5.9, a soft start characteristic can be provided in the event the AC drive is non-operational. **NOTE**: A controlled acceleration can be achieved with this scheme, but speed control is not available in the by-pass mode.



WARNING: Proper care must be taken to isolate the AC drive from line and load potential when the controller is energized.

Figure 5.9
Typical Application Diagram of a By-Pass Contactor for an AC Drive

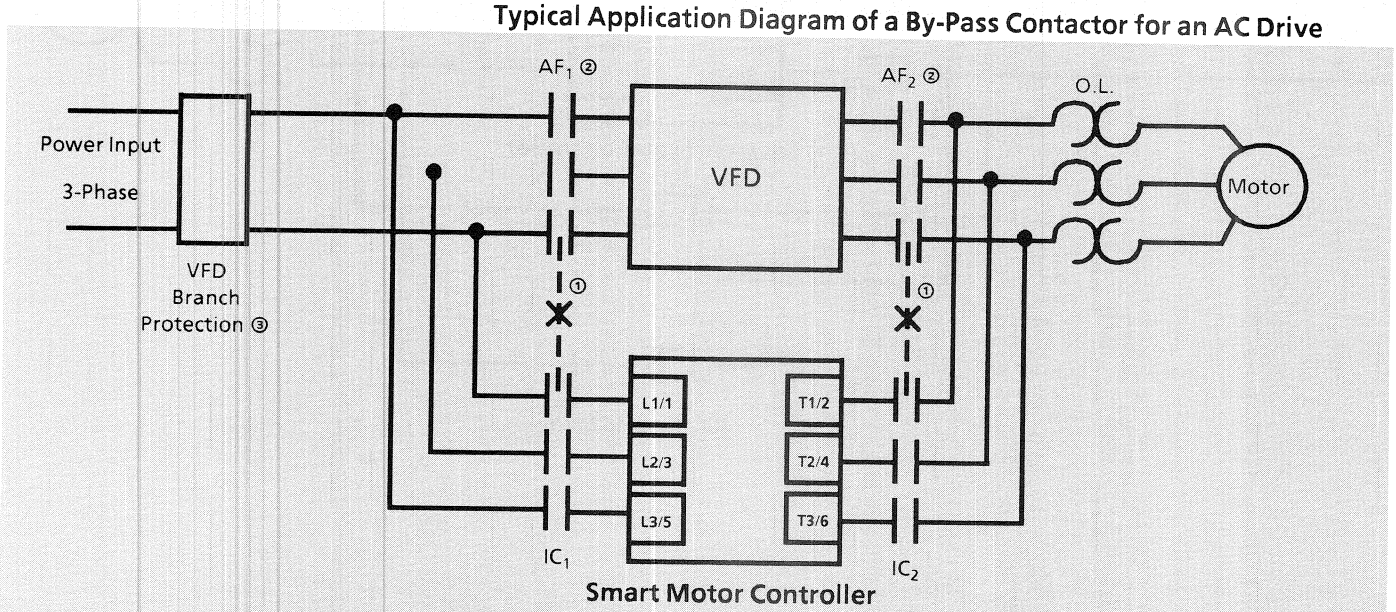

① Mechanical interlock required.
② Control logic customer supplied.
③ Many VF drives are rated 150% FLA. Since the Smart Motor Controller can be used for 600% FLA starting, separate branch circuit protection may be required.

Smart Motor Controller with a Bulletin 1410 Motor Winding Heater

Figure 5.10
Typical Application Diagram of Smart Motor Controller with a Bulletin 1410 Motor Winding Heater

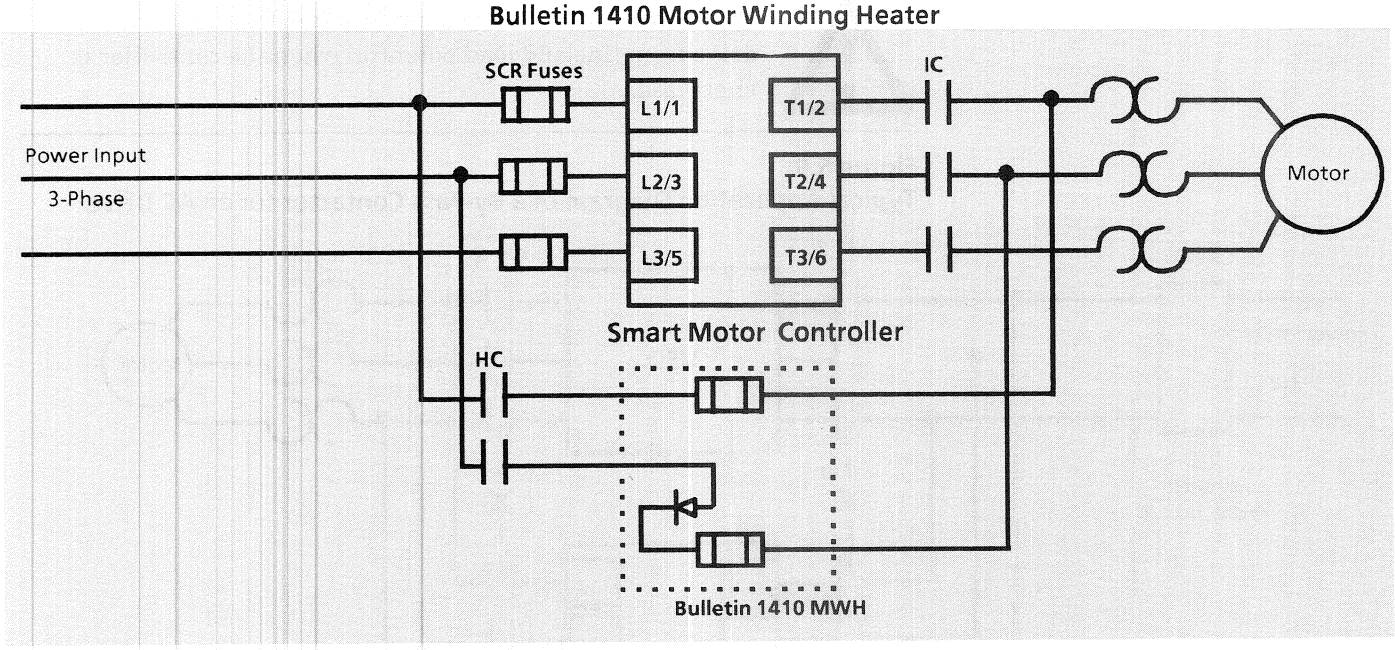

Motor Torque Capabilities with SMC PLUS Controller Options

SMB Smart Motor Braking

The stopping torque output of the SMC PLUS Controller will vary depending upon the braking current setting and motor characteristics. Typically the maximum stopping torque will be between 80-100% of the full load torque of the motor when set at 400% braking current.

Preset Slow Speed

There are two torque characteristics with the slow speed option which have to be considered. The first is the starting torque, the second would be the available running torque at low speed (see Figure 5.11). These torque characteristics will also vary depending upon the speed selected. Refer to Figure 5.12 for the approximate maximum available starting and running full load torque at maximum current settings. One digital rotary adjustment (Slow Speed Current) will control the starting and running torque values.

Figure 5.11
Starting and Running Torque

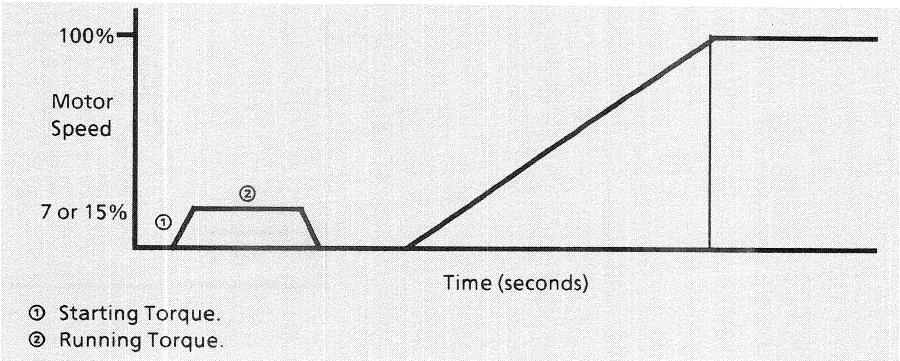

① Starting Torque.
② Running Torque.

Figure 5.12
Maximum Torque at Maximum Current Settings ③

Preset Slow Speed	Maximum Starting Torque as a Percentage of Full Load Torque	Maximum Running Torque as a Percentage of Full Load Torque
7%	90 - 100%	110 - 120%
15%	50%	100%

③ Values may vary based on motor types.

Motor Torque Capabilities with SMC PLUS Controller Options (continued)

Accu-Stop Option

There are two levels of braking torque applied with the Accu-Stop option. There is the braking portion which brakes to slow speed, and the slow speed braking/coast (see Figure 5.13). The level of these braking currents are adjusted via one rotary digital switch.

The maximum braking torque available from braking to slow speed is approximately 60% of full load torque of the motor (Point A). The maximum braking torque available from slow speed to stop (when braking is selected) is 80-100% of full load torque of the motor (Point B), which is applied for one second.

Using the slow speed starting portion of the Accu-Stop option will result in the same starting and running torque characteristics as described in the Preset Slow Speed option section.

Figure 5.13
Accu-Stop Option

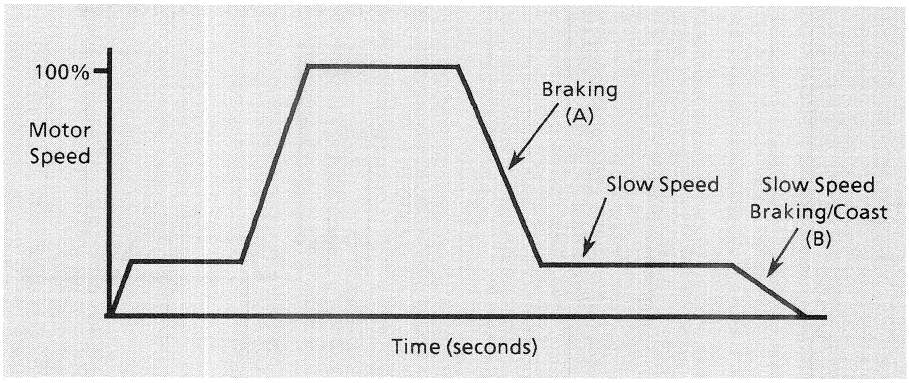

Energy Saver

The Energy Saver is an integral feature with the Smart Motor Controller. It can be used in applications such as conveyors, material handling equipment, variable volume air handling units, pumps, compressors, and various other applications where the motor is lightly loaded or unloaded for extended periods of time.

Energy Saver Operation

Since the Smart Motor Controller output voltage is under SCR control at all times, the Energy Saver can automatically decrease motor power losses by controlling the motor terminal voltage.

The energy saving mode is operational when turned on and the motor is operating at less than full load. As the motor is unloaded, the motor terminal voltage is reduced. The motor then operates at the optimum level required to drive a given load without severely affecting speed.

When the load is reapplied, the motor voltage increases. The controller provides only enough voltage to keep the motor running. Typical response time from no load to full load is 50 milliseconds. Full to no load response time to optimum level is typically less than 5 seconds.

Energy Saver (continued)

Background

Losses within a motor are divided into a number of different components. There are friction and windage losses, I^2R losses, core losses and magnetic losses. The friction and windage losses remain constant at full load and no load. However, at no load, I^2R losses, core losses and magnetic losses can be reduced by deceasing the applied voltage.

For example, a 30 kW (40hp) motor draws 30 kW from the line to produce work. An additional amount of energy is drawn from the line due to the internal losses to the motor. If the motor is 90% efficient, an additional 3 kW or a total of approximately 33 kW is drawn from the power line when the motor is operating at full load.

If an energy saver could be designed to eliminate all the losses in the motor, the maximum amount of energy this theoretical device could save would be the 3kW in losses. The motor would still draw the 30 kW from the line which it would convert to power from its output shaft.

The motor industry indicates that one-half of the losses could theoretically be saved. The other one-half could not be saved because of such variables as friction, windage, etc. Using this approximation with the 30kW (40hp) motor, one-half of the 3kW losses could be saved, The maximum theoretical savings would be equal to 1.5kW. Actual applications would probably have less than the theoretical 1.5kW.

Application Requirements

Savings in energy costs are possible in certain applications. Figure 5.14 shows test results of actual motors. Figure 5.14 was developed using 10, 50, and 125 hp motors.

Based on these test results and other data there is very little savings possible above 50% load. A curve of maximum theoretical savings can be drawn using the theoretical savings of 50% of the losses and the data which indicates little or no savings above 50% load. This is illustrated by the upper curve in Figure 5.15.

In reviewing the test data for lower limits it could be estimated that 20% losses are saved at no load and no losses saved at 20% load. This is illustrated by the lower curve in Figure 5.15.

Figure 5.14
% kW Saved vs. % Rated Load

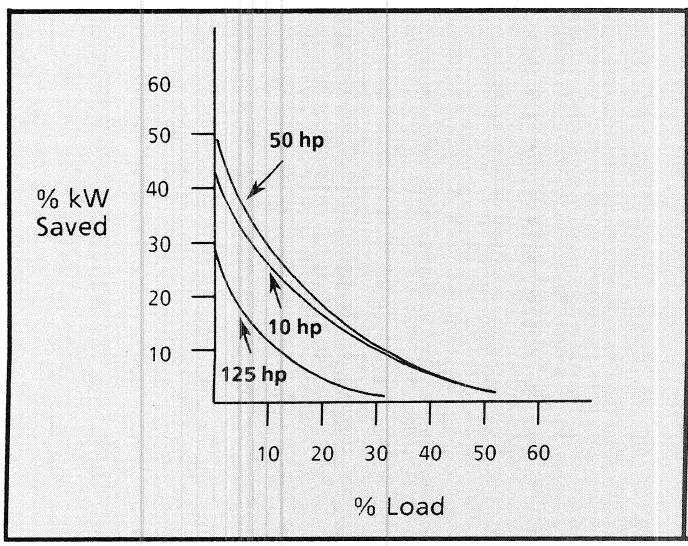

Figure 5.15
Estimated Energy Savings

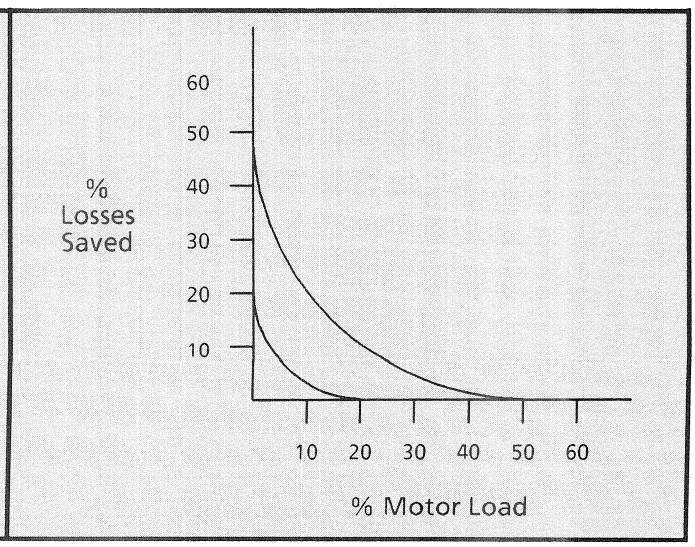

Energy Saver (continued)

Preliminary Estimates

A simple "full load-no load" preliminary estimate for the application of an energy saver can be made by using the following procedure:

1. Convert horsepower to kilowatts.
2. Determine the total kilowatts used by the motor by dividing the horsepower kilowatts by motor efficiency.
3. Determine the motor losses by subtracting converted horsepower kilowatts from total kilowatts.
4. Calculate the maximum theoretical savings in kilowatts by multiplying motor losses by 0.50.
5. Determine kilowatt-hours saved by multiplying the maximum theoretical savings in kW times the number of hours per year the motor is operated at no load.
6. Maximum theoretical savings dollars can then be determined by multiplying kilowatt-hours saved times the cost of electricity per kilowatt hours.

Energy Saver (continued)

Figure 5.16
Sample Calculation

Motor efficiency: 90%
Motor loading duty cycle: 50% (ON 15 min., OFF 15 min.)
Motor horsepower and run time: 50 hp, 8 hours per day, 2080 hours per year

Use the above data and the following procedure for theoretical maximum energy savings.

1. $kW = 0.746(50)$
   $kW = 37.3$
2. $kW_{total} = (37.3) \div 0.90$
   $kW_{total} = 41.4$ kW
3. Losses = 41.4 - 37.3
   Losses = 4.1 kW
4. Maximum theoretical savings = (4.1kW)x(0.50)
   Maximum theoretical savings = 2.05kW
5. (2.05)x(0.5)x(2080) = 2132 kWh per year

Finally, at a typical cost of $0.08 per kWh, the estimated savings is:

6. (0.08)x(2132) for $170.56 per year

NOTE: Calculations assume that the normal load is equal to the full load rating of the motor, and that the loading level is a no-load condition.

If this calculation looks favorable, then additional detailed calculations must be made to get a more exact figure on the dollars saved. Precise duty cycle and loading cycles must be more accurately estimated. Points can then be selected from the theoretical maximum savings curve. Savings for each increment of loading must then be calculated.

Note that a motor running unloaded and not connected to equipment is not the same as when the motor is connected to the equipment. Motor manufacturers should be contacted to determine the actual no load characteristics.

These calculations have been done on the basis that a solid-state controller was required for reasons other than energy savings. If energy savings is the main reason for purchasing this type of device, the savings would be less. The reason is that there is approximately a 1 to $1\frac{1}{2}$ volt drop across each solid-state power pole. There are additional losses associated with solid-state devices.

For example, a solid-state controller for a three-phase motor drawing 50 amperes will have a loss ranging from 150 to 225 watts above an equivalent electromechanical device. Therefore, these losses are deducted from the total energy savings if the energy saver were replacing an electromechanical device.

Chapter 6 Design Philosophy

Philosophy

Smart Motor Controllers are designed to operate in today's industrial environments. These controllers are manufactured to provide consistent and reliable operation.

Line Voltage Conditions

Voltage transients, disturbances, harmonics and noise exist in any industrial supply. A solid-state controller must be able to withstand them and should not be an unnecessary source of generating them back into the line.	• Ease of selection to the required line voltage is achieved with a design that provides, operation over a wide voltage range at 50/60 Hz within a given controller rating. • The controller can withstand 3000V surges at a rate of 100 bursts per second for 10 seconds (IEEE Std. 472) and the showering arc test of 350-1500V (NEMA Std. ICS2-230) for higher resistance to malfunction in a noisy environment. • An optional MOV module is available to protect SCRs from voltage transients.

Current and Thermal Ratings

Solid-state controller ratings must ensure reliability under the wide range of current levels and starting times needed in various applications.	• SCR packaging keeps junction temperatures below 125°C (257°F) when running at full-rated current to reduce thermal stress and provide longer, more reliable operation. • The thermal capacity of the SMC Controllers meet NEMA Standards MG-1 and IEC34 (S1).

Mechanical Shock and Vibration

Solid-state controllers must withstand the shock and vibration generated by the machinery that they control.	• Smart Motor Controllers meet the same shock and vibration specifications as electromechanical starters. They can withstand a 30G shock for 11 ms in any plane and one hour of vibration of 2.5G without malfunction.

Set-Up and Staying Up

Simple, easily understood settings providing identifiable, consistent results.	• For ease of installation the controllers include compact design and feed thru wiring. • The Smart Motor Controllers are global products rated at 50/60 Hz., and are UL Listed and CSA Approved. • All adjustments are accomplished with digital switches, eliminating guesswork and the risk of "drift" over time that exists with potentiometer adjustments. • All digital adjustments are behind access doors to discourage unauthorized adjustment. • A full line of enclosures are available.

Chapter 7 Reduced Voltage Starting

Introduction to Reduced Voltage Starting

There are two primary reasons for using a reduced voltage when starting a motor:

- Limit line disturbances
- Reduce excessive torque to the driven equipment

Why it is desirable to avoid these problems will not be discussed. Different methods of reduced voltage starting of motors will also be explored.

When starting a motor at full voltage, the current drawn from the power line is typically 600% of normal full load current. This high current flows until the motor is almost up to speed and then decreases as shown in the following figure. This could cause line voltage dips and brown-outs.

Figure 7.1
Full Load Current vs Speed

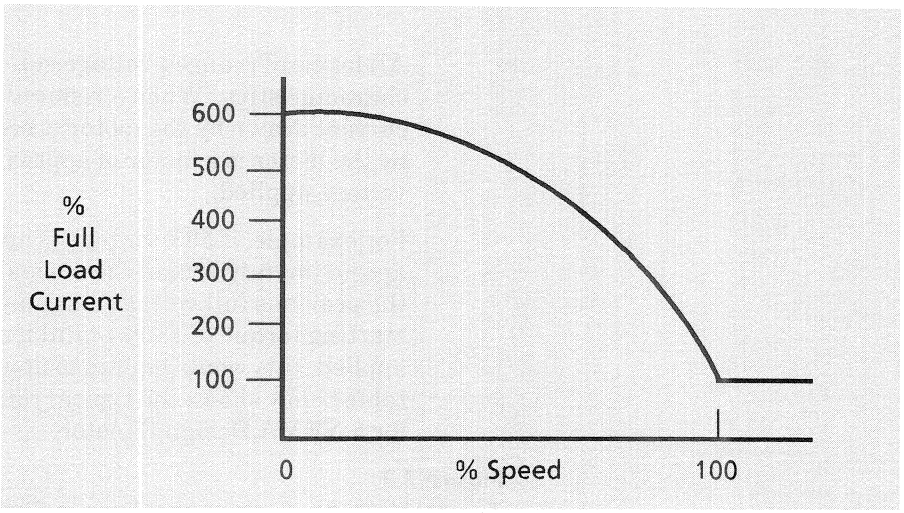

In addition to high starting currents, the motor also produces starting torques which are higher than full load torque. The magnitude of the starting torque is dependent on the motor design. NEMA publishes standards for torques and currents for motor manufacturers to follow. Typically, a NEMA Design B motor will have a locked rotor or starting torque in the area of 180% of full load torque.

In many applications this starting torque can cause excessive mechanical damage such as belt, chain or coupling breakage.

Reduced Voltage

In the United States, the most widely used method of electromechanical reduced voltage starting is the autotransformer type. Part-winding starting is the next most popular method. In the rest of the world, Wye-Delta (Y-Δ), also referred to as Star-Delta, is the predominant form of reduced voltage starting.

Reduced Voltage (continued)

Figure 7.2
Bulletin 570 Autotransformer

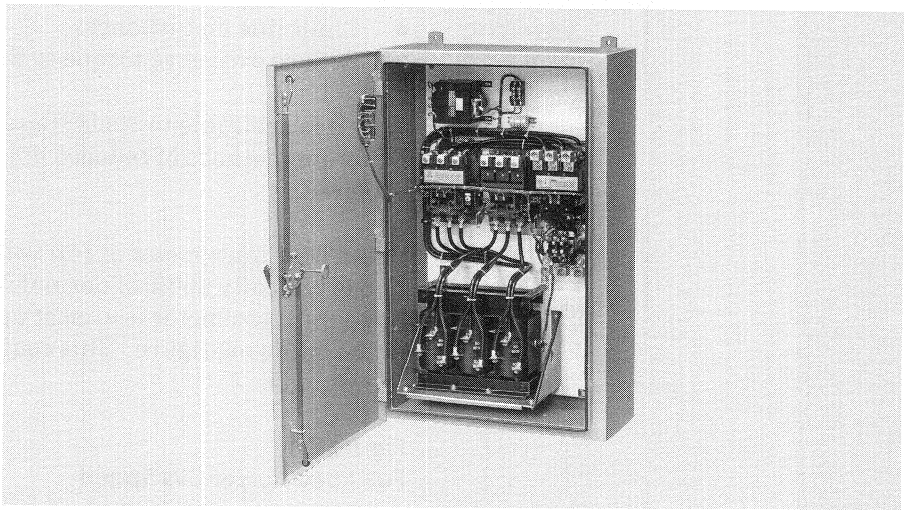

All forms of reduced voltage starting affect the motor current and torque characteristics. When a reduced voltage is applied to a motor at rest, the current drawn by the motor is reduced. In addition, the torque produced by the motor is a factor of approximately the square of the percentage of voltage applied.

For example, if 50% voltage is applied to the motor, a starting torque of approximately 25% of the normal starting torque would be produced. In the previous full voltage example, the NEMA Design B motor had a starting torque of 180% of full load torque. With only 50% voltage applied, this would equate to approximately 45% of full load torque. The table below shows the typical relationship of voltage, current, and torque for a NEMA Design B motor.

Figure 7.3
Typical Voltage, Current and Torque Characteristics for NEMA Design B Motors

Starting Method	% Voltage at Motor Terminals	Motor Starting Current as a % of:		Line Current as a % of:		Motor Starting Torque as a % of:	
		Locked Rotor Current	Full Load Current	Locked Rotor Current	Full Load Current	Locked Rotor Torque	Full Load Torque
Full Voltage	100	100	600	100	600	100	180
Autotrans.							
80% tap	80	80	480	64	307	64	115
65% tap	65	65	390	42	164	42	76
50% tap	50	50	300	25	75	25	45
Part Winding	100	65	390	65	390	50	90
Star Delta	100	33	198	33	198	33	60
Solid-State	0-100	0-100	0-600	0-100	0-600	0-100	0-180

Reduced Voltage (continued)

With the wide range of torque characteristics for the various methods, selection of the electromechanical reduced voltage starter is more application dependent. In many instances available torque becomes the factor in the selection processes.

Limiting line current has been a prime reason in the past for using electromechanical reduced voltage starting. Utility current restrictions, as well as in-plant bus capacity, may require motors above a certain horsepower to be started with reduced voltage. Some areas of the world have requirements that any motor above 7-1/2 horsepower be started with reduced voltage.

A second reason for using reduced voltage motor starting is to control torque. High inertia loads are a good example where electromechanical reduced voltage starting has been used to control the acceleration of the motor and load.

Electromechanical reduced voltage starters must make a transition from reduced voltage to full voltage at some point in the starting cycle. At this point there is normally a line current surge. The amount of surge depends upon the type of transition being used and the speed of the motor at the transition point.

There are two methods of transition, namely, Open Circuit Transition and Closed Circuit Transition. By open transition, it is meant that the motor is actually disconnected from the line for a brief period of time when the transition takes place. With closed transition the motor remains connected to the line during transition. Open transition will produce a higher surge of current due to the fact that the motor is momentarily disconnected from the line. Examples of open and closed transition currents are shown in this figure.

Figure 7.4
Open Circuit Transition vs. Closed Circuit Transition

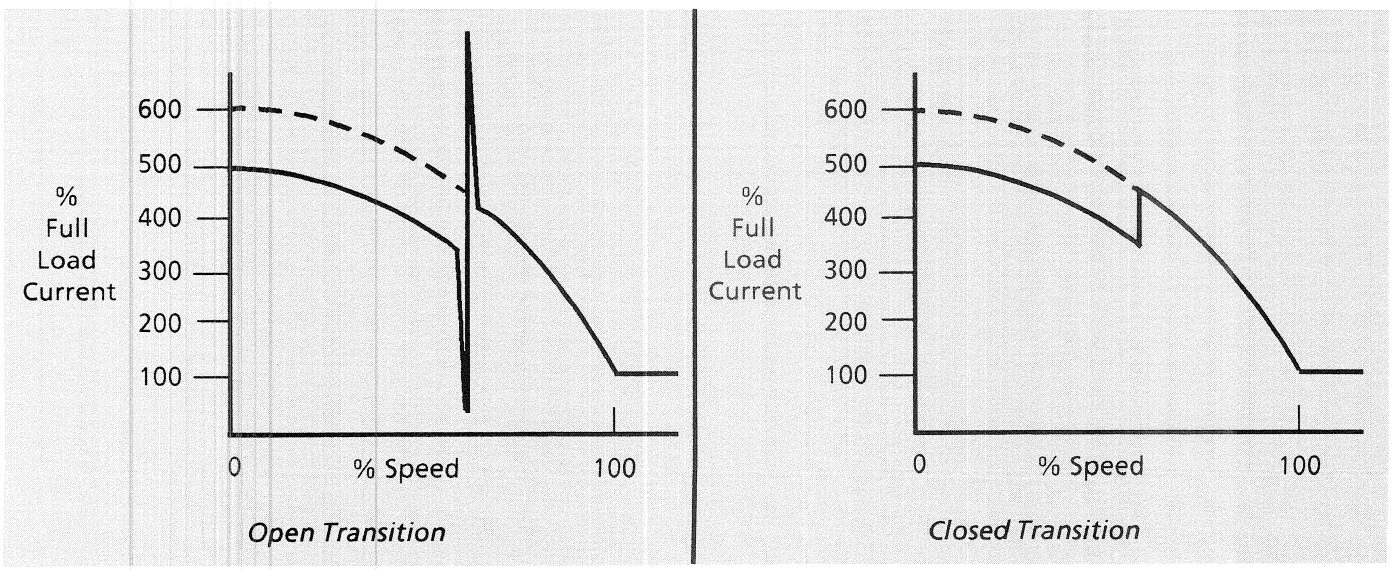

Reduced Voltage (continued)

The motor speed can determine the amount of current surge which occurs at transition. Transfer from reduced voltage to full voltage should occur at as close to full speed as possible. This also minimizes the amount of surge on the line.

The following figures illustrate transition at low motor speed and near full speed. The transition at low speed shows the current surge as transition occurs at 550% which is greater than the starting current of 400%. The transition near full speed shows that the current surge is 300% which is below the starting current.

Figure 7.5
Transition at Low Speed vs. Transition near Full Speed

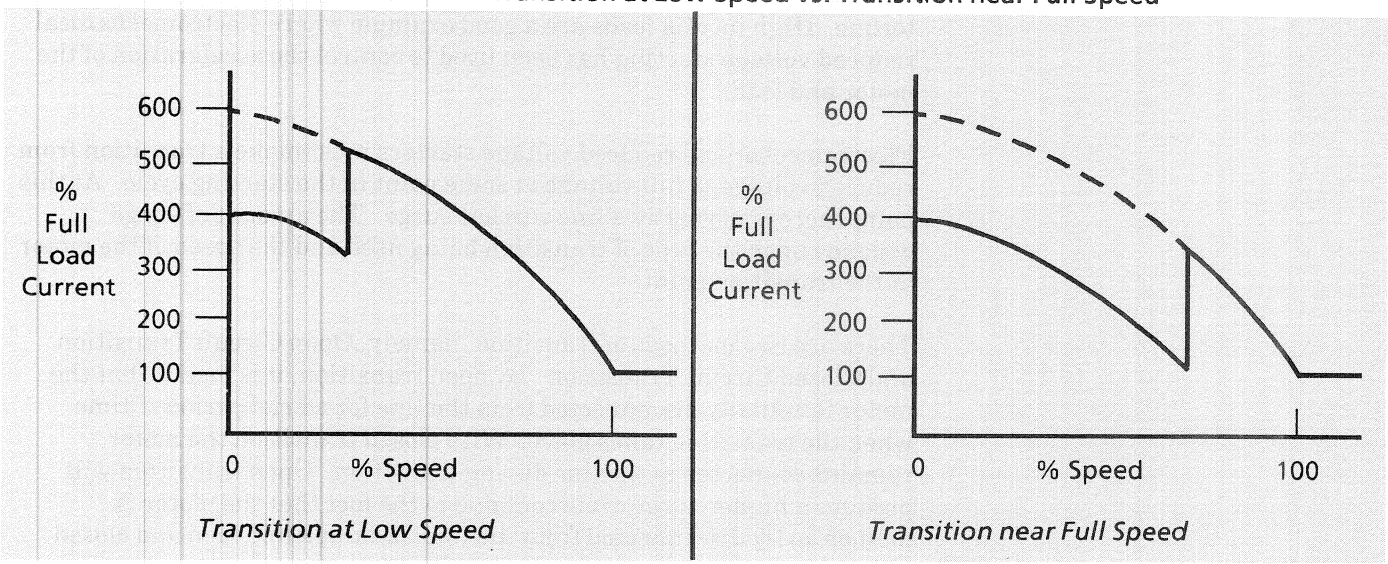

Solid State

The main application of solid state controllers is to provide soft start or stepless reduced voltage starting of AC motors. The same principles of current and torque apply to both electromechanical reduced voltage starters and solid state controllers. Solid state controllers offer the choice of three starting modes; soft start, current limit, or full voltage in the same device.

Figure 7.6
Solid State Controllers

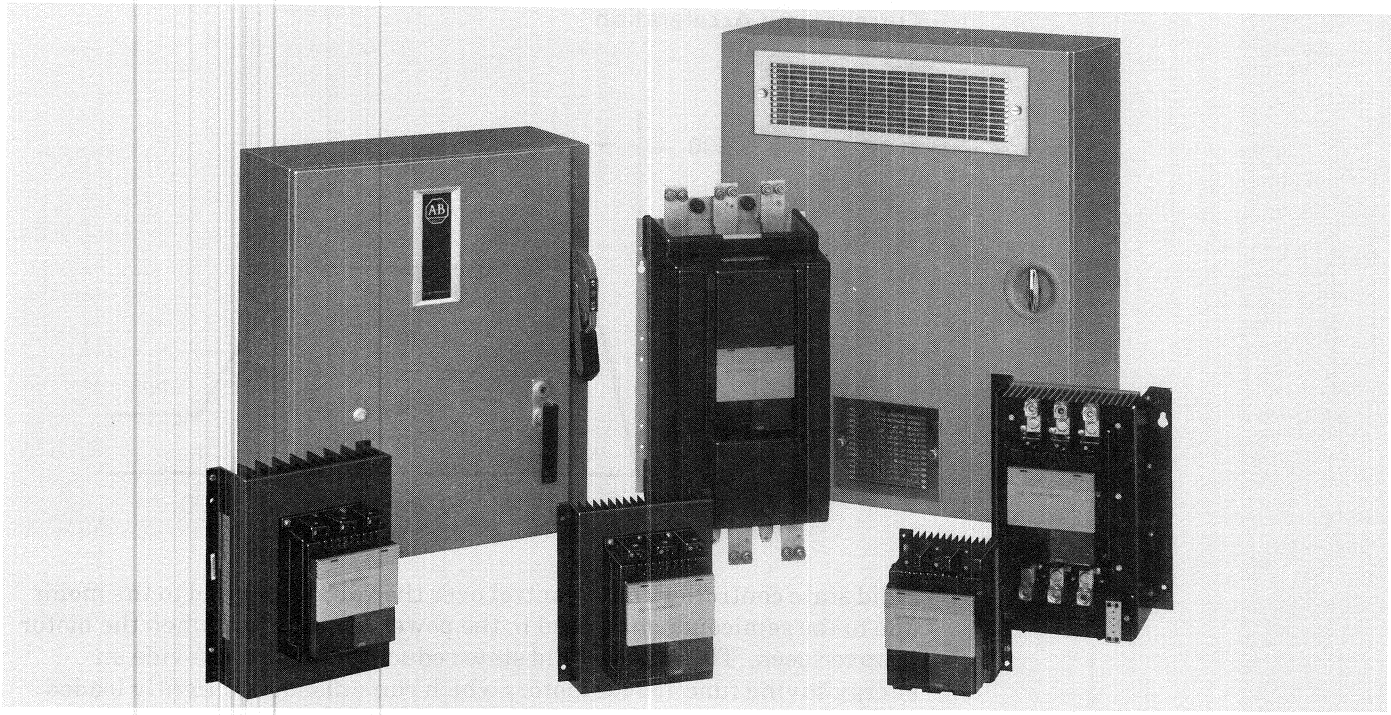

In addition to selecting the modes, the solid-state controller allows adjustment of the time for the soft start ramp or current limit maximum value which enables selection of the starting characteristic to meet the application. The most widely used version is the soft start. This method provides a smooth start for most applications.

The major advantages of solid state controllers are the elimination of the current transition point and the time to full voltage can be adjusted usually from 2 to 30 seconds. The result is no large current surge when the solid state controller is set up and correctly matched to the load as illustrated below.

Figure 7.7
Soft Start

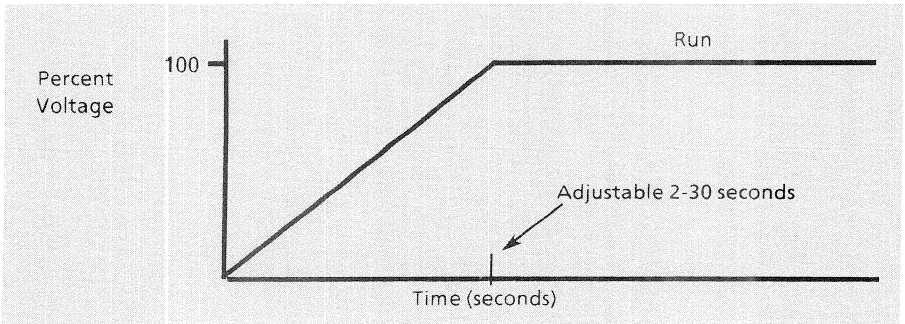

Solid State (continued)

Current limit can be used where power line limitations or restrictions require a specific current load. The next illustration shows a 450% current limit curve. Other values may be selected such as 200%, 300%, or 400%, depending on the particular application. Current limit is also used where higher starting torque is required compared to soft start which typically starts at less than 300% current. An example where current limit is used is on high inertia loads such as ball mills.

Figure 7.8
Current Limit Acceleration

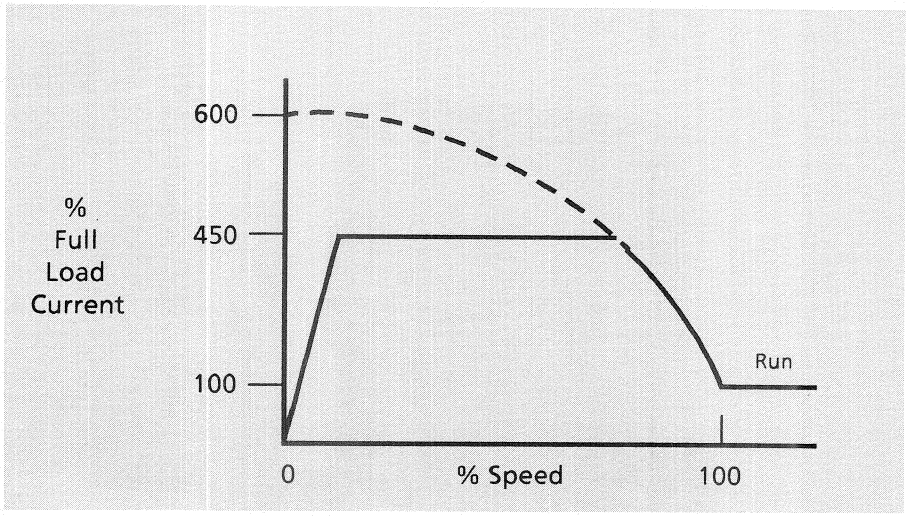

Solid state controllers have control over the voltage applied to the motor due to the semiconductors used in the power circuit, even when the motor is up to speed. This allows solid state reduced voltage to provide an energy saving function for motors which run unloaded or lightly loaded for long periods of time. Intelligence within the solid state controller determines when the motor is lightly loaded. The voltage to the motor can then be reduced by properly controlling the semiconductors until the motor is operating at an optimum point. This same intelligence detects when a load is reapplied and increases the voltage to prevent stalling.

Other features which are available with solid-state controllers include additional protection to the motor and controller and diagnostics to aid in set up and troubleshooting. Protection typically provided includes shorted SCR, phase loss, open load lead, SCR overtemperature, and stalled motor. Appropriate LEDs illuminate to aid in troubleshooting when one of these faults trip out the solid state reduced voltage controller.

Chapter 8 Solid State Starters Using SCRs

Solid State Starters Using SCRs

In solid state starters, SCRs (silicon controlled rectifier) (see Figure 8.1) are used to control the voltage to the motor. An SCR allows current to flow in one direction only. The amount of conduction of an SCR is controlled by the pulses received at the gate of the SCR. When two SCRs are connected back to back (see Figure 8.2), the AC power to a load can be controlled by changing the firing angle of the line voltage (see Figure 8.3) during each half cycle . By changing the angle, it is possible to increase or decrease the voltage and current to the motor. The Smart Motor Controller incorporates a microcomputer to control the firing of the SCRs. Six SCRs are used in the power section to provide full cycle control of the voltage and current. The voltage and current can be slowly and steplessly increased to the motor.

Figure 8.1
Silicon Controlled Rectifier (SCR)

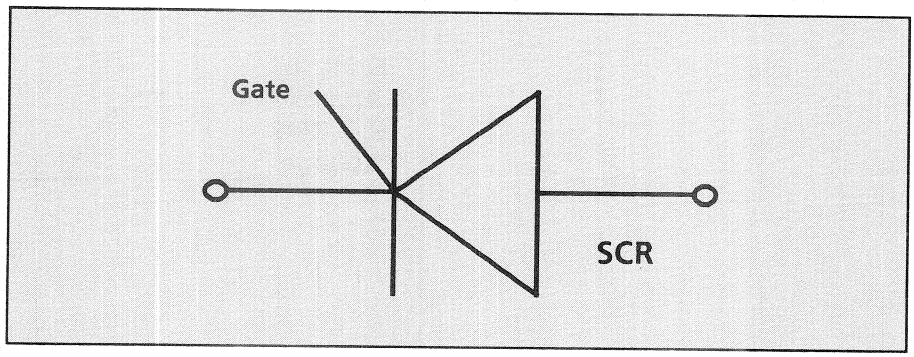

Figure 8.2
Typical Wiring Diagram of SCRs

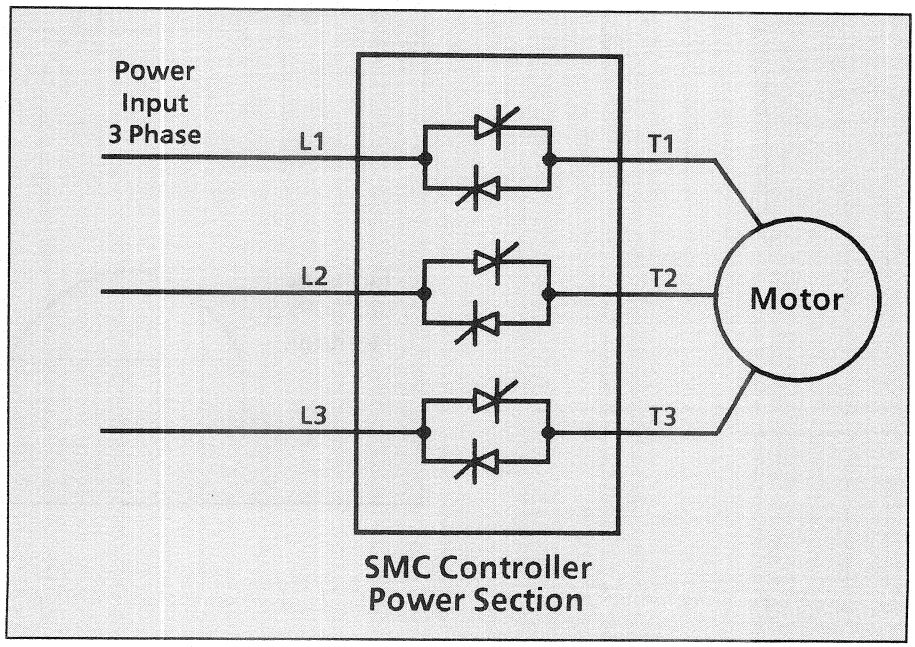

Solid State Starters Using SCRs (continued)

Figure 8.3
Different Firing Angles (Single Phase Simplification)

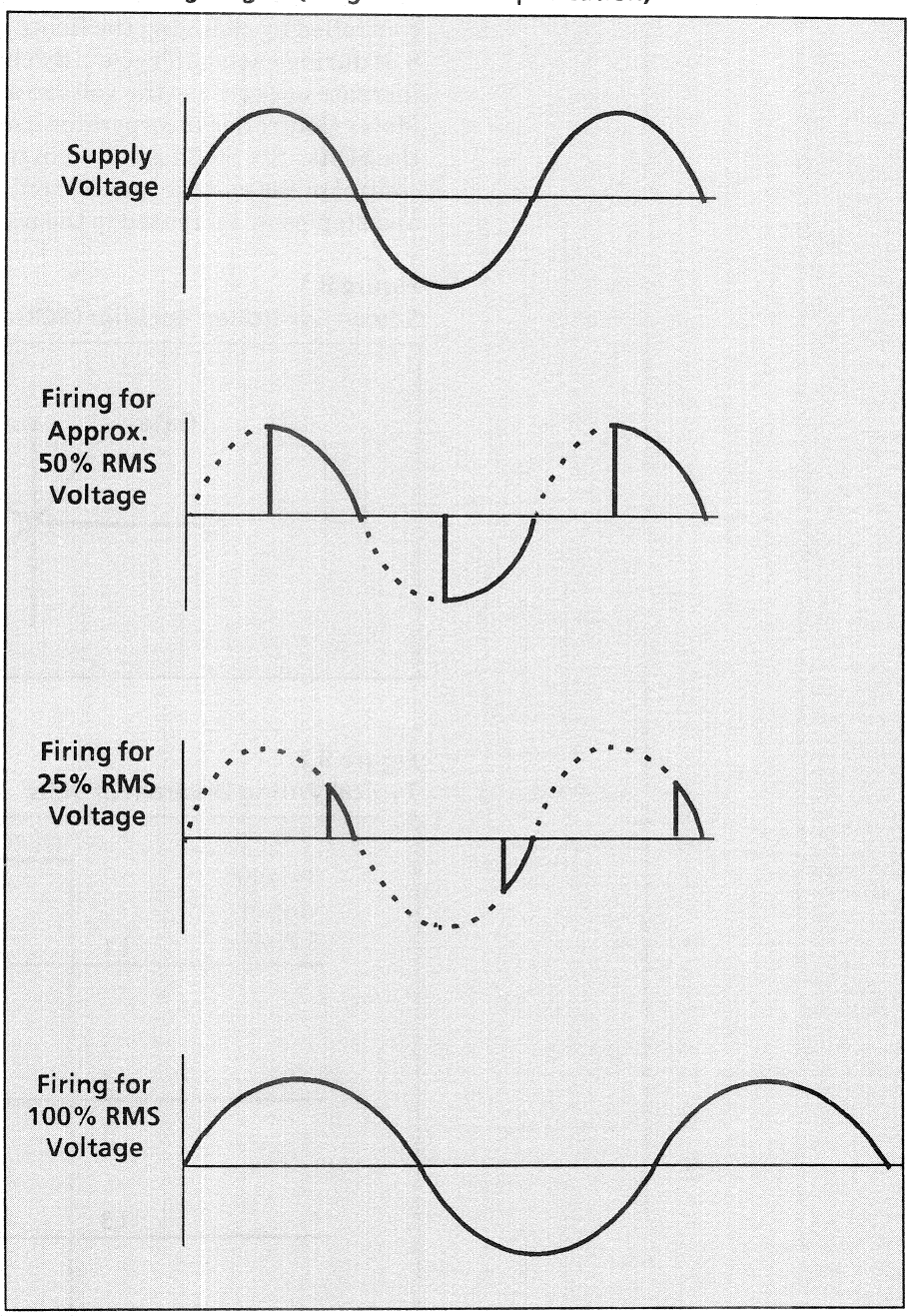

Chapter 9 Reference

Introduction

Certain mechanical parameters must be taken into consideration when applying motor controllers. The following section explains what these parameters are and how to calculate or measure them.

Motor Output Speed/ Torque/Horsepower

The speed at which an induction motor operates is dependent upon the input power frequency and the number of poles for which the motor is wound. The higher the frequency, the faster the motor runs. The more poles the motor has, the slower it runs. To determine the synchronous speed of an induction motor, the following equation is used:

$$\text{Synchronous Speed} = \frac{60 \times 2 \times \text{Frequency}}{\text{Number of Poles}}$$

Actual full-load speed (the speed at which the motor will operate at nameplate rated load) will be less than synchronous speed. This difference between synchronous speed and full-load speed is called slip. Percent slip is defined as follows:

$$\text{Percent Slip} = \frac{\text{Synchronous Speed - Full Load Speed}}{\text{Synchronous Speed}} \times 100$$

Induction motors are built having slip ranging from less than 5% to as much as 20%. A motor with a slip of less than 5% is called a normal slip motor. Motors with a slip of 5% or more are used for applications requiring high starting torque.

Torque & Horsepower

Torque and horsepower are two important motor characteristics that determine the size of the motor required for a given application. The difference between the two can be explained using a simple illustration of a shaft and wrench.

Figure 9.1
Shaft and Wrench

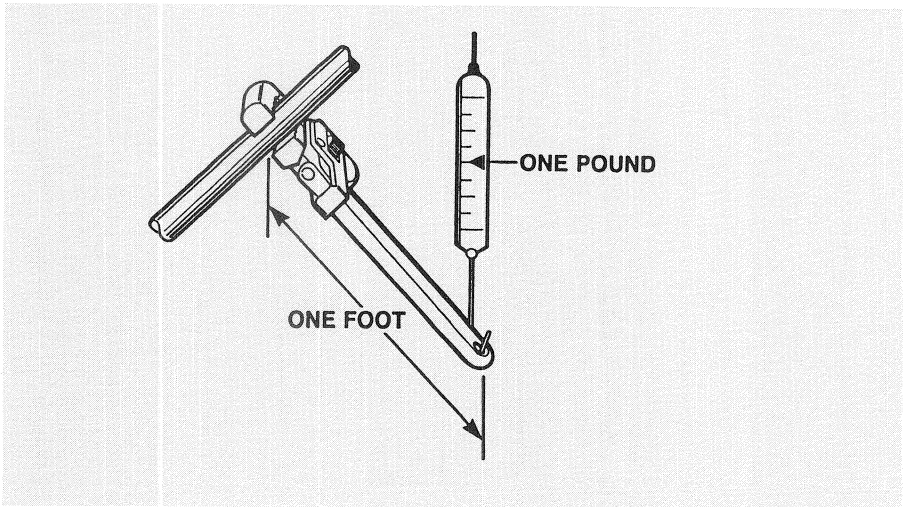

Torque & Horsepower (continued)

Torque is merely a turning effort. In the above illustration, it takes one pound at the end of the one foot wrench to turn the shaft at a steady rate. Therefore, the torque required is one pound x one foot, or one foot-lb. If the wrench were turned twice as fast, the torque required would remain the same, provided it is turned at a steady rate.

Horsepower, on the other hand, takes into account how fast the shaft is turned. Turning the shaft rapidly requires more horsepower than turning it slowly. Thus, horsepower is a measure of the rate at which work is done. By definition, the relationship between torque and horsepower is as follows:

$$1 \text{ Horsepower} = 33{,}000 \text{ Ft-Lbs./Min.}$$

In the above example, the one pound force moves a distance of

$$2 \text{ Ft.} \times \pi \times 1 \text{ Lb, or } 6.28 \text{ Ft-Lbs.}$$

To produce one horsepower, the shaft would have to be turned at a rate of:

$$\frac{1 \text{ Hp} \times 33{,}000 \text{ Ft-Lbs./Min.}}{6.28 \text{ Ft-Lbs./Revolution}} = 5250 \text{ RPM}$$

For this relationship, an equation can be derived for determining horsepower output from speed and torque.

$$\text{HP} = \frac{\text{RPM} \times 2 \times \text{Torque}}{30{,}000} \quad \text{OR} \quad \text{HP} = \frac{\text{RPM} \times \text{Torque}}{5250}$$

For this relationship, full-load torque is:

$$\text{Full-Load Torque in Ft-Lb.} = \frac{\text{HP} \times 5250}{\text{Full-Load RPM}}$$

Torque & Horsepower (continued)

The following graph illustrates a typical speed-torque curve for a NEMA Design B induction motor. An understanding of several points on this curve will aid in properly applying motors.

Figure 9.2
Speed Torque Curve

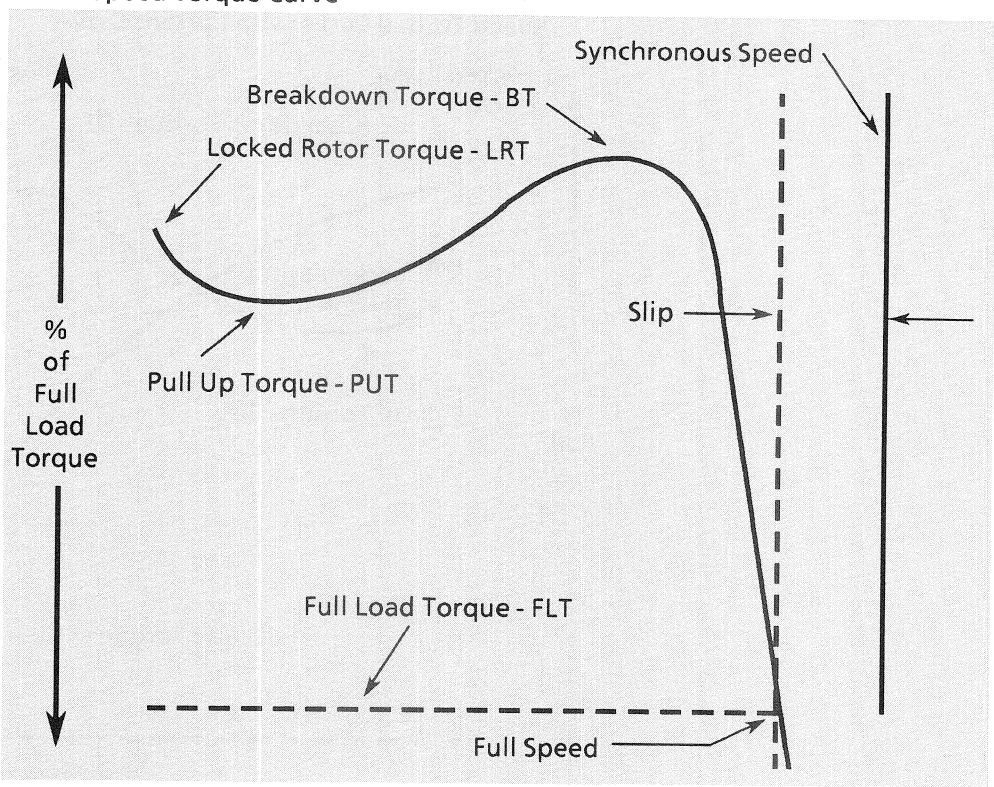

Locked-Rotor Torque (LRT)

Locked-rotor torque is the torque which the motor will develop at rest for all angular positions of the rotor with rated voltage at rated frequency applied. It is sometimes known as "starting torque" and is usually measured as percent of full-load torque.

Pull-Up Torque (PUT)

Pull-up torque of an induction motor is the minimum torque developed during the period of acceleration from locked rotor to the speed at which breakdown torque occurs. For motors which do not have definite breakdown torque (such as NEMA Design D) pull-up torque is the minimum torque developed up to rated full-load speed and is usually expressed as a percent of full-load torque.

Breakdown Torque (BT)

The breakdown torque of an induction motor is the maximum torque the motor will develop with rated voltage applied at rated frequency without an abrupt drop in speed. Breakdown torque is usually expressed as a percentage of full-load torque.

Full-Load Torque (FLT)

The full-load torque of a motor is the torque necessary to produce its rated horsepower at full-load speed. In foot-lbs, it is equal to the rated horsepower times 5250 divided by the full-load speed in RPM.

Torque & Horsepower (continued)

In addition to the relationship between speed and torque, the relationship of current draw to these two values is an important application consideration. The speed/torque curve is repeated below with the current curve added to demonstrate a typical relationship.

Figure 9.3
Speed Torque Curve with Current Curve

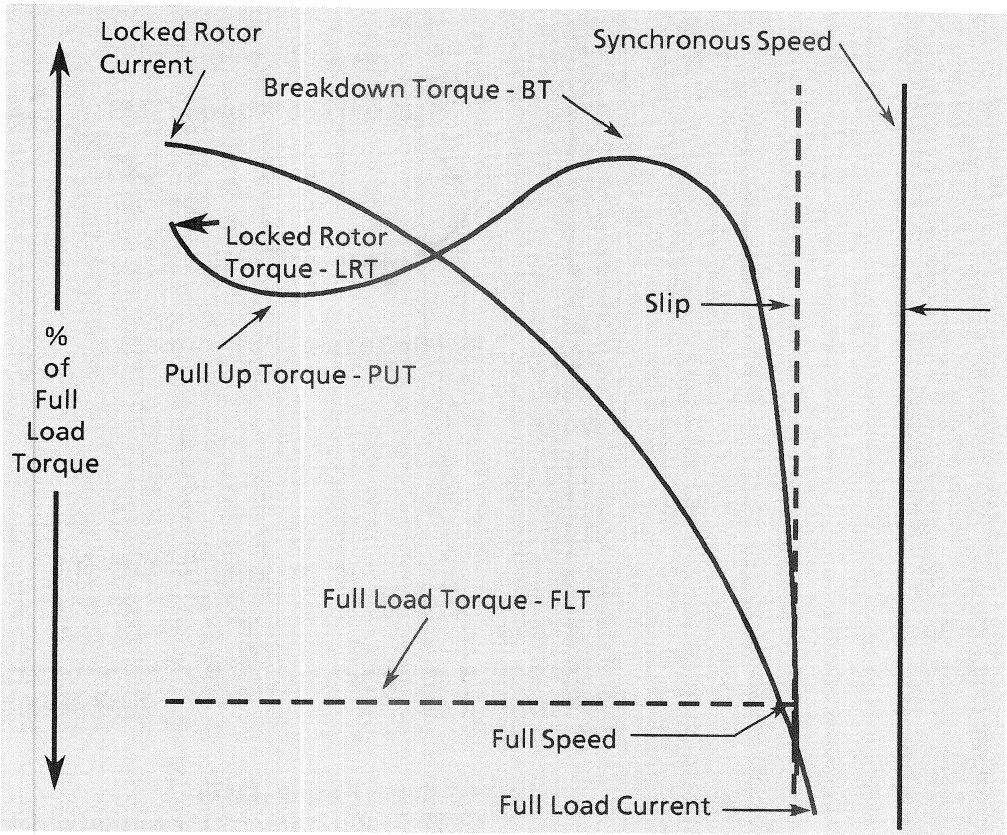

Two important points on this current curve need to be explained:

Full-Load Current

The full-load current of an induction motor is the steady state current taken from the power line when the motor is operating at full-load torque with rated voltage at rated frequency applied.

Locked-Rotor Current

Locked-rotor current is the steady state current of a motor with the rotor locked and with rated voltage applied at rated frequency. NEMA has designed a set of code letters to define locked-rotor Kilovolt-amperes-per-horsepower. This code letter appears on the nameplate of all AC squirrel cage induction motors.

KVA per horsepower is calculated as follows:

For three-phase motors:

$$KVA/HP = \frac{1.73 \times \text{Current (in Amperes)} \times \text{Volts}}{1000 \times HP}$$

For single phase motors:

$$KVA/HP = \frac{\text{Current (in Amperes)} \times \text{Volts}}{1000 \times HP}$$

Torque & Horsepower (continued)

NEMA Locked-Rotor Current Code Letters

Letter Designation	KVA per Hp ①
A	0 - 3.15
B	3.15 - 3.55
C	3.55 - 4.0
D	4.0 - 4.5
E	4.5 - 5.0
F	5.0 - 5.6
G	5.6 - 6.3
H	6.3 - 7.1
J	7.1 - 8.0
K	8.0 - 9.0
L	9.0 - 10.0
M	10.0 - 11.2
N	11.2 - 12.5
P	12.5 - 14.0
R	14.0 - 16.0
S	16.0 - 18.0
T	18.0 - 20.0
U	20.0 - 22.4
V	22.4 and up

① Locked-rotor kilovolt-amperes-per-horsepower range includes the lower figure up to, but not including, the higher figure (i.e. 3.14 is letter "A" and 3.15 is letter "B").

By manipulating the preceding equation for KVA/HP for three-phase motors the following equation can be derived for calculating locked-rotor current:

$$LRA = \frac{1000 \times HP \times KVA/HP}{1.73 \times Volts}$$

This equation can then be used to determine approximate starting current of any particular motor. For instance, the approximate starting current for 7 1/2 Hp., 230 volt motor with a locked-rotor KVA code letter of G would be:

$$LRA = \frac{1000 \times 7.5 \times 6.0}{1.73 \times 230} = 113 \text{ Amps}$$

Torque & Horsepower (continued)

Operating a motor in a locked-rotor condition for an extended period of time will result in insulation failure due to the excessive heat generated in the stator. The following graph illustrates the maximum time a motor may be operated at locked-rotor without injurious heating. This graph assumes a NEMA Design B motor with Class B temperature rise.

Figure 9.4
Motor Safe Time vs. Line Current - Standard Induction Motors

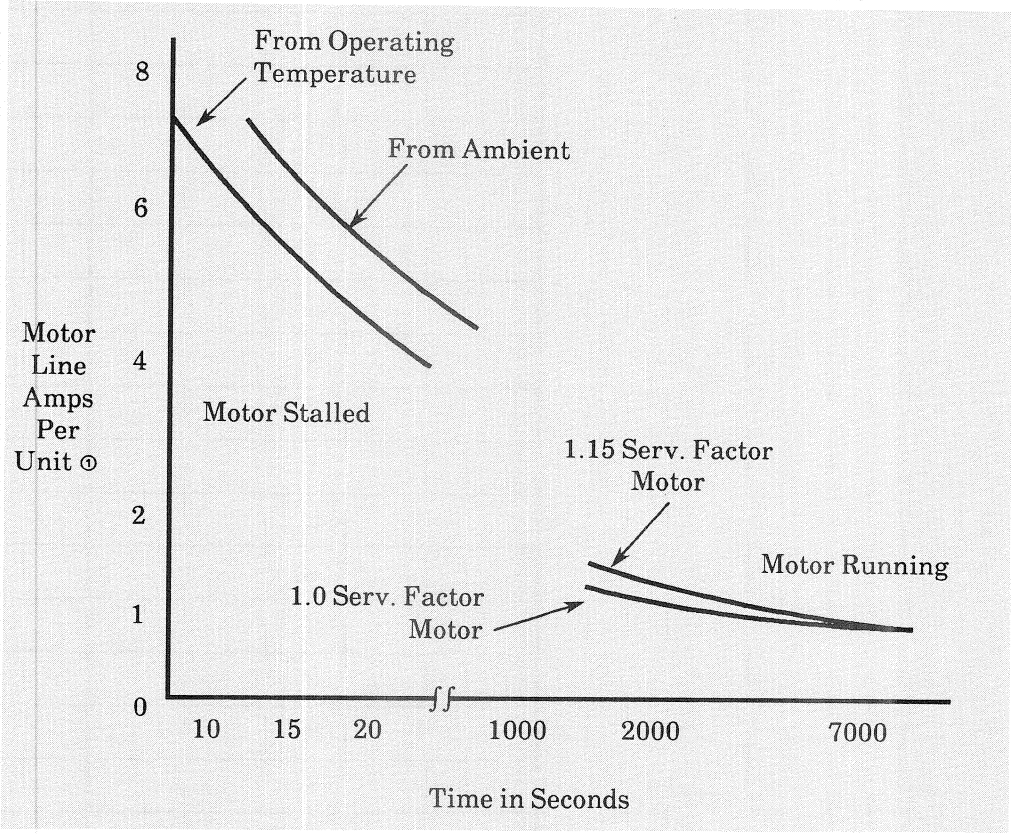

① Note: Base Amps and Nameplate Amps.

Motor protection, either inherent or in the motor control should be selected to limit stall time of the motor.

Motor Output for NEMA Design Designations Polyphase 1-500 HP

NEMA has designated several specific types of motors, each having unique speed/torque relationships. These designs are described below along with some typical applications for each type. Following these descriptions are summaries of performance characteristics.

Figure 9.5
Typical NEMA Design A Speed/Torque Curve

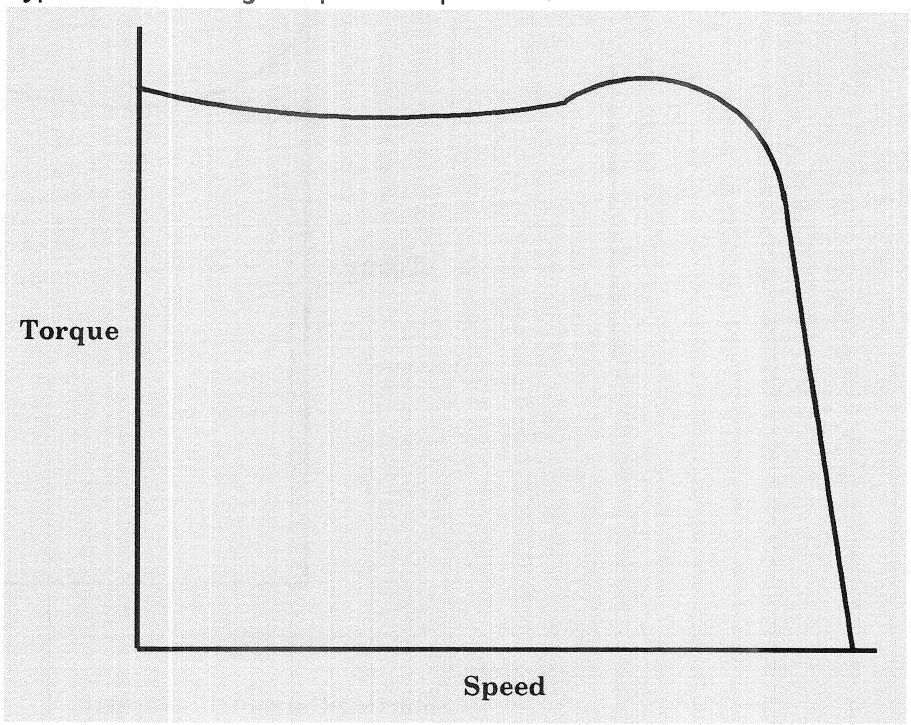

Starting Current:	High
Starting Torque:	High
Breakdown Torque:	High
Full-Load Slip:	Low
Applications:	Broadly applied including fans, blowers, pumps, machine tools, or other uses with high starting torque requirements and essentially constant load.

Motor Output for NEMA Design Designations Polyphase 1-500 HP (continued)

Figure 9.6
Typical NEMA Design B Speed/Torque Curve

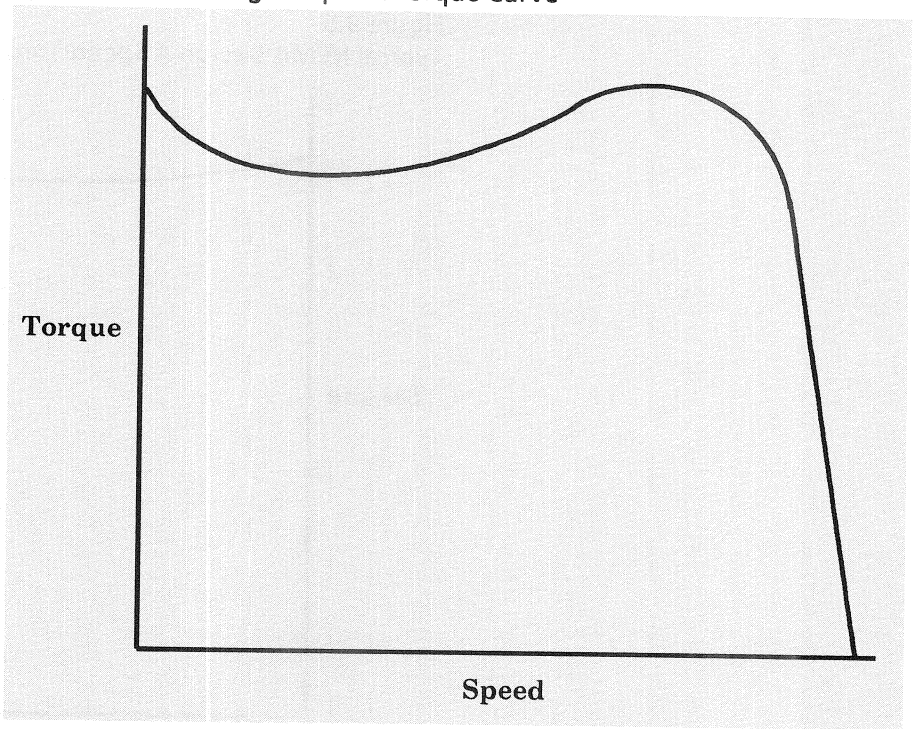

Starting Current:	Normal
Starting Torque:	Normal
Breakdown Torque:	Normal
Full-Load Slip:	Normal
Applications:	Broadly applied including fans, blowers, pumps, machine tools, or other uses with normal starting torque requirements and essentially constant load.

Motor Output for NEMA Design Designations Polyphase 1-500 HP (continued)

Figure 9.7
Typical NEMA Design C Speed/Torque Curve

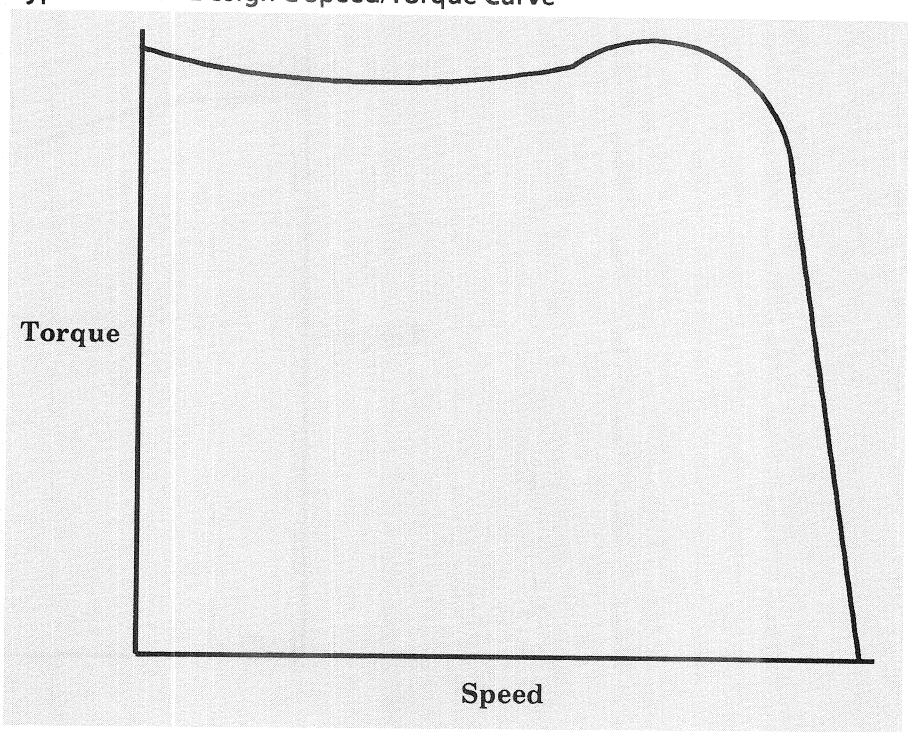

Starting Current:	Low
Starting Torque:	High
Breakdown Torque:	Low
Full-Load Slip:	Low
Applications:	The higher starting torque of NEMA Design C motors makes them advantageous for use on hard-to-start loads such as plunger pumps, conveyors, and compressors.

Motor Output for NEMA Design Designations Polyphase 1-500 HP (continued)

Figure 9.8
Typical NEMA Design D Speed/Torque Curve

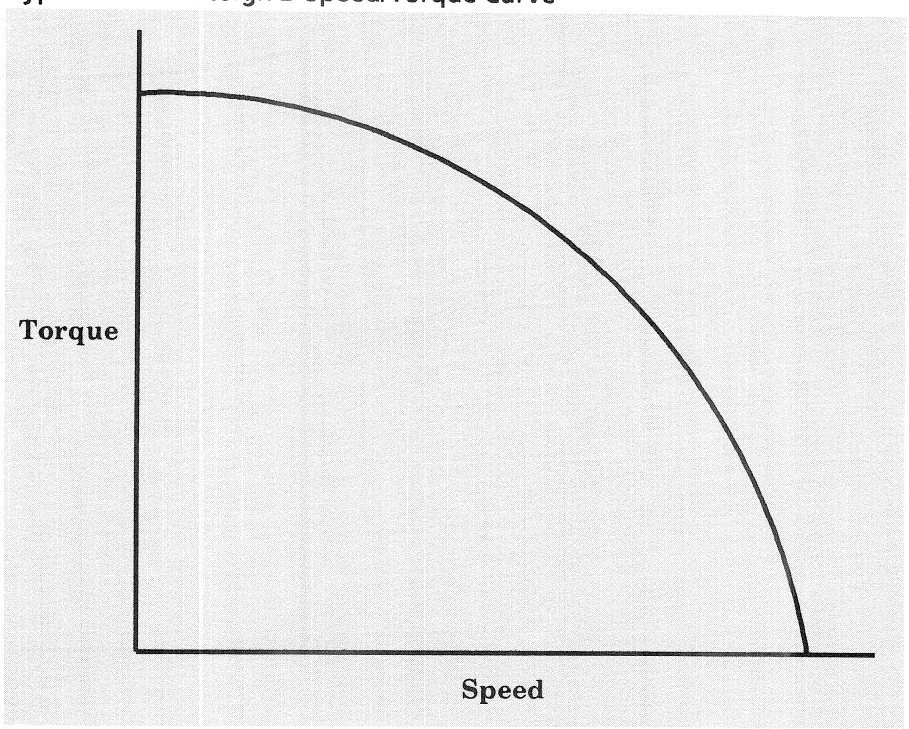

Starting Current:	Normal
Starting Torque:	High
Breakdown Torque:	None
Full-Load Slip:	High (5 - 13%)
Applications:	The combination of high starting torque and high slip make NEMA Design D motors ideal for use on very high inertia loads and/or where a considerable variation in load exists. These motors are commonly used on punch presses, shears, cranes, hoists, and elevators.

Motor Output for NEMA Design Designations Polyphase 1-500 HP (continued)

Figure 9.9
Motor Output – Comparison of NEMA Polyphase Designs

NEMA Design	Starting Torque	Locked Rotor Torque	Breakdown Torque	% Slip	Applications
A	High	High	High	< 5%	Broad applications including fans, blowers, pumps, and machine tools.
B	Normal	Normal	Normal	< 5%	Normal starting torque for fans, blowers, rotary pumps, unloaded compressors, conveyors, metal cutting, machine tools, miscellaneous machinery.
C	Low	High	Low	Low	High inertia, starts such as large centrifugal blowers, fly wheels and crusher drums. Loaded starts such as piston pumps, compressors and conveyors.
D	Normal	High	None	High	Very high inertia and loaded starts. Choice of slip range to match application.
				5-8%	Punch press, sheers and forming machine tools.
				8-13%	Cranes, hoists, elevators and oil well pumping jacks.

Calculating Torque (Acceleration Torque Required for Rotating Motion)

Some machines must be accelerated to a given speed in a certain period of time. The torque rating of the drive may have to be increased to accomplish this objective. The following equation may be used to calculate the average torque required to accelerate a known inertia (Wk^2). This torque must be added to all the other torque requirements of the machine when determining the drive and motor's required peak torque output.

$$T = \frac{WK^2 \times (\Delta N)}{308t}$$

Where:

T = Acceleration Torque (lb-ft.)

WK^2 = total system inertia (lb-ft^2) that the motor must accelerate. This value includes motor armature, reducer and load.

ΔN = Change in speed required (RPM)

t = time to accelerate total system load (seconds).

NOTE: The number substituted for (WK^2) in this equation must be in units of lb-ft^2. Consult the conversion tables for the proper conversion factor.

Calculating Torque (Acceleration Torque Required for Rotating Motion)

The same formula can be used to determine the minimum acceleration time of a given drive, or if a drive can accomplish the desired change in speed within the required time period.

Transposed formula:

$$T = \frac{WK^2 \times (\Delta N)}{308t}$$

General Rule:

If the running torque is greater than the accelerating torque, use the running torque as the full-load torque required to determine the motor horsepower.

Calculating Horsepower

NOTE: The following equations for calculating horsepower are meant to be used for estimating purposes only. These equations do not include any allowance for machine friction, windage or other factors. These factors must be considered when selecting a device for a machine application.

Once the machine torque is determined, the required horsepower is calculated using the formula:

$$HP = \frac{T \times N}{5250}$$

Where:
HP = Horsepower
T = Torque (lb-ft.)
N = Speed of motor at rated load (RPM)

If the calculated horsepower falls between standard available motor ratings, select the higher available horsepower rating. It is good practice to allow some margin when selecting the motor horsepower.

Inertia

Inertia is a measure of the body's resistance to changes in velocity, whether the body is at rest or moving at a constant velocity. The velocity can be either liner or rotational.

The moment of inertia (WK^2) is the product of the weight (W) of an object and the square of the radius of gyration (K^2). The radius of gyration is a measure of how the mass of the object is distributed about the axis of rotation. Because of this distribution of mass, a small diameter cylindrical part has a much lower inertia than a large diameter part.

WK^2 or WR^2

WR^2 refers to the inertia of a rotating member that was calculated by assuming the weight of the object was concentrated around its rim at a distance R (radius) from the center (e.g. flywheel).

WK^2 refers to the inertia of a rotating member that was calculated by assuming the weight of the object was concentrated at some smaller radius, K (termed the radius of gyration). To determine the WK^2 of a part, the weight is normally required (e.g. cylinder, pully, gear).

Torque Formulas

$$T = \frac{HP \times 5250}{N}$$

Where:
- T = Torque (lb-ft.)
- HP = Horsepower
- N = Speed of motor at rated load (RPM)

$$T = F \times R$$

Where:
- T = Torque (lb-ft.)
- F = Force (lbs.)
- R = Radius (ft.)

$$T\,(\text{Accelerating}) = \frac{WK^2 \times (\Delta RPM)}{308 \times t}$$

Where:
- T = Torque (lb-ft.)
- WK^2 = Inertia reflected to the Motor Shaft (lb-ft^2)
- ΔRPM = Change in speed
- t = Time to accelerate (sec.)

NOTE:
To change lb-ft.^{2} to in-lb-sec.^{2}: Divide by 2.68
To change in-lb-sec.^{2} to lb-ft.^{2}: Multiply by 2.68

AC Motor Formulas

$$\text{Sync Speed} = \frac{\text{Freq} \times 120}{\text{Number of Poles}}$$

Where:
- Sync Speed = Synchronous Speed (RPM)
- Freq. = Frequency (Hz)

$$\%\ \text{Slip} = \frac{(\text{Sync Speed} - \text{FL Speed}) \times 100}{\text{Sync Speed}}$$

Where:
- FL Speed = Full Load Speed (RPM)
- Sync Speed = Synchronous Speed (RPM)

$$\text{Reflected } WK^2 = \frac{(WK^2 \text{ of Load})}{(\text{Reduction Ratio})^2}$$

WK^2 = Inertia (lb-ft.^{2})

Torque Characteristics on Common Applications

This chart offers a quick guideline on the torque required to breakaway, start and run many common applications.

APPLICATION	LOAD TORQUE AS PERCENT OF FULL LOAD DRIVE TORQUE		
	BREAK-AWAY	ACCEL-ERATING	PEAK RUNNING
Agitators: Liquid Slurry	 100 150	 100 100	 100 100
Blowers, centrifugal: Valve closed Valve open	 30 40	 50 110	 40 100
Blowers, positive-displacement, rotary, bypassed	40	40	100
Card machines, textile	100	110	100
Centrifuges (extractors)	40	60	125
Chippers, wood, starting empty	50	40	200
Compressors, axial-vane, loaded	40	100	100
Compressors, reciprocating,start unloaded	100	50	100
Conveyors, belt (loaded)	150	130	100
Conveyors, drag (or apron)	175	150	100
Conveyors, screw (loaded)	175	100	100
Conveyors, shaker-type (vibrating)	150	150	75
Draw presses (flywheel)	50	50	200
Drill presses	25	50	150
Escalators, stairways (starting unloaded)	50	75	100
Fans, centrifugal, ambient: Valve closed Valve open	 25 25	 60 110	 50 100
Fans, centrifugal, hot: Valve closed Valve open	 25 25	 60 200	 100 175
Fans, propeller, axial-flow	40	110	100
Feeders, (belt) loaded	100	120	100
Feeders, distributing,oscillating drive	150	150	100
Feeders, screw, compacting rolls	150	100	100
Feeders, screw, filter-cake	150	100	100

Torque Characteristics on Common Applications (continued)

APPLICATION	LOAD TORQUE AS PERCENT OF FULL LOAD DRIVE TORQUE		
	BREAK-AWAY	ACCEL-ERATING	PEAK RUNNING
Feeders, screw, dry	175	100	100
Feeders, vibrating, motor-driven	150	150	100
Frames, spinning, textile	50	125	100
Grinders, metal	25	50	100
Ironers, laundry (mangles)	50	50	125
Jointers, woodworking	50	125	125
Machines, bottling	150	50	100
Machines, buffing, automatic	50	75	100
Machines, cinder-block, vibrating	150	150	70
Machines, keyseating	25	50	100
Machines, polishing	50	75	100
Mills, flour, grinding	50	75	100
Mills, saw, band	50	75	200
Mixers, chemical	175	75	100
Mixers, concrete	40	50	100
Mixers, dough	175	125	100
Mixers, liquid	100	100	100
Mixers, sand, centrifugal	50	100	100
Mixers, sand, screw	175	100	100
Mixers, slurry	150	125	100
Mixers, solids	175	125	175
Planers, woodworking	50	125	150
Presses, pellet (flywheel)	150	75	150
Presses, punch (flywheel)	150	75	100
Pumps, adjustable-blade, vertical	50	40	125
Pumps, centrifugal, discharge open	40	100	100

Torque Characteristics on Common Applications (continued)

APPLICATION	LOAD TORQUE AS PERCENT OF FULL LOAD DRIVE TORQUE		
	BREAK-AWAY	ACCEL-ERATING	PEAK RUNNING
Pumps, oil-field, flywheel	150	200	200
Pumps, oil, lubricating	40	150	150
Pumps, oil fuel	40	150	150
Pumps, propeller	40	100	100
Pumps, reciprocating, positive displacement	175	30	175
Pumps, screw-type, primed, discharge open	150	100	100
Pumps, Slurry-handling, discharge open	150	100	100
Pumps, turbine, centrifugal, deep-well	50	100	100
Pumps, vacuum (paper mill service)	60	100	150
Pumps, vacuum (other applications)	40	60	100
Pumps, vane-type, positive displacement	150	150	175
Rolls, crushing (sugar cane)	30	50	100
Rolls, flaking	30	50	100
Sanders, woodworking, disk or belt	30	50	100
Saws, band, metalworking	30	50	100
Saws, circular, metal, cutoff	25	50	150
Saws, circular, wood, production	50	30	150
Saws, edger (see edgers)			
Saws, gang	60	30	150
Screens, centrifugal (centrifuges)	40	60	125
Screens, vibrating	50	150	70
Separators, air (fan-type)	40	100	100
Shears, flywheel-type	50	50	120
Textile machinery	150	100	90
Walkways, mechanized	50	50	100
Washers, laundry	25	75	100

Electrical Formulas

OHMS LAW:

$$I = \frac{E}{R} \qquad R = \frac{E}{I} \qquad E = I \times R$$

Where:
I = Current (Amperes)
E = EMF or Voltage (Volts)
R = Resistance (Ohms)

POWER IN DC CIRCUITS:

$$P = I \times E \qquad HP = \frac{I \times E}{746}$$

$$kW = \frac{I \times E}{1000} \qquad kWH = \frac{I \times E \times Hours}{1000}$$

Where:
P = Power (Watts)
I = Current (Amperes)
E = EMF or Voltage (Volts)
kW = Kilowatts
kWH = Kilowatt-Hours

$$kVA\,(1\varnothing) = \frac{I \times E}{1000} \qquad kVA\,(3\varnothing) = \frac{I \times E \times 1.73}{1000}$$

Where:
kVA = Kilovolt-Amperes
I = Current (Amperes)
E = EMF or Voltage (Volts)

$$kW\,(1\varnothing) = \frac{I \times E \times PF}{1000}$$

$$kW\,(2\varnothing) = \frac{I \times E \times PF \times 1.42}{1000}$$

$$kW\,(3\varnothing) = \frac{I \times E \times PF \times 1.73}{1000}$$

$$PF = \frac{W}{V \times I} = \frac{kW}{kVA}$$

Where:
kW = Kilowatts
I = Current (Amperes)
E = EMF or Voltage (Volts)
PF = Power Factor
W = Watts
V = Volts
kVA = Kilovolt-Amperes

Calculating Motor Amperes

$$\text{Motor Amperes} = \frac{\text{HP} \times 746}{\text{E} \times 1.732 \times \text{EFF} \times \text{PF}}$$

$$\text{Motor Amperes} = \frac{\text{kVA} \times 1000}{1.73 \times \text{E}}$$

$$\text{Motor Amperes} = \frac{\text{kW} \times 1000}{1.73 \times \text{E} \times \text{PF}}$$

Where:
- HP = Horsepower
- E = EMF or Voltage (Volts)
- Eff = Efficiency of Motor (%/100)
- kVA = Kilovolt-Amperes
- kW = Kilowatts
- PF = Power Factor

Other Formulas

Calculating Accelerating Force for Linear Motion:

$$\text{F (Acceleration)} = \frac{\text{W} \times \Delta\text{V}}{1933 \times \text{t}}$$

Where:
- F = Force (lbs.)
- W = Weight (lb.)
- ΔV = Change in Velocity (FPM)
- t = Time to accelerate weight (seconds)

$$\text{LRA} = \frac{\text{HP} \times \left(\frac{\text{Start kVA}}{\text{HP}}\right)}{\text{E} \times 1.73} \times 1000$$

Where:
- LRA = Locked Rotor Amperes
- HP = Horsepower
- kVA = Kilovolt-Amperes
- E = EMF or Voltage (Volts)

$$\text{LRA @ Freq. X} = \frac{\text{60 Hz LRA}}{\sqrt{\frac{60}{\text{Freq. X}}}}$$

Where:
- 60 Hz LRA = Locked Rotor Amperes
- Freq. X = Desired frequency (Hz)

Engineering Constants

Temperature

0 deg. C = Freezing point of water
32 deg. F = Freezing point of water = 0 Degrees C
100 deg. C = Boiling point of water at atmospheric pressure
212 deg. F = Boiling point of water at atmospheric pressure
1.8 deg. ΔF = 1 deg, ΔC
0.252 Calories = 1 BTU
-270 deg. C = Absolute zero
-459.6 deg. F = Absolute zero

Length

1760 Yards = 1 Mile
25.4 mm = 2.54 cm = 1 in.
3 ft. = 1 Yard
3.2808 ft. = 1 m
39.37 in. = 1 m = 100 cm = 1000 mm
5280 ft. = 1 Mile
0.62137 Miles = 1 km

Weight

16 oz. = 1 lb.
2.2046 lb. = 1 kg.
2.309 ft. water at 62 deg. F = 1 PSI
28.35 gm = 1 oz.
59.76 lbs. = Weight of 1 Cu. ft. of water at 212 deg. F
.062428 lb. per cu. ft. = 1 kg/cu. m
62.355 lbs = Weight of 1 cu. ft. water at 62 deg. F
$8\frac{1}{3}$ (8.32675) lbs. = Weight 1 gal. water at 62 deg. F

Power

1.3410 HP = 1 kW
2.545 BTU per hr. = 1 HP
33,000 ft-lb. per min. = 1 HP
550 ft-lb. per sec. = 1 HP
745.7 W = 1 HP

Area

10.764 sq. ft. = 1 sq. m
1,273,239 circular mils = 1 sq. in.
144 sq. in. = 1 sq. ft.
645 mm^2 = 1 sq. in.
9 sq. ft. = 1 sq. yd.
.0929 sq. m = 1 sq. ft.

Mathematic

1.4142 = square root of 2
1.7321 = square root of 3
3.1416 = π ratio of circumference of circle to diameter = ratio of area of a circle to square of radius
57.296 degrees = 1 rad. (angle)
0.7854 X diameter squared = area of a circle

Pressure

14.223 PSI = 1 kg per sq. cm = 1 "metric atmosphere"
2.0355 in. Hg at 32 deg. F = 1 PSI
2.0416 in. Hg at 62 deg. F = 1 PSI
2,116.3 PSF = 1 in. water at 62 deg. F
760 mm Hg = atmospheric pressure at 0 deg. C
.07608 lb. = weight 1 cu. ft. air at 62 deg. F and 14.7 PSI

Engineering Constants (continued)

Volume

1,728 Cu. in. = 1 Cu. ft.
231 cu. in. = 1 gal. (U.S.)
277.274 cu. in = 1 gal. (British)
27 cu. ft. = 1 cu. yd.
31 gal. (31.5 U.S. gal.) = 1 barrel
35.314 cu. ft. = 1 cu. m
3.785 liters = 1 gal.
61.023 cu. in. = 1 liter
7.4805 gal. = 1 cu. ft.

Temperature

deg. = degrees
C = Celsius (Centigrade)
F = Fahrenheit
BTU = British Thermal Unit

Length

yd. = yard
m = meter
mm = millimeter (1/1000 of a meter)
cm = centimeter (1/100 of a meter)
in. = inch
ft. = feet
km = kilometer

Weight

Oz. = ounce
lb. = pound
kg. = kilogram
g = gram

Electrical

Ω = Ohms
∅ = Phase
V = Volts
A = Amperes
ma = milliamperes
μa = microamperes
mV = millevolts
Kv = kilovolts

Power/Energy

HP = horsepower
W = watt
kW = kilowatt
kWH = kilowatt-hours

Work/Inertia

ft-lb. = foot pounds
WK^2 = moment of inertia
$N\text{-}m^2$ = Newton meters^2

Area

sq. ft. = square feet
sq. m = square meters
mil = unit of length or angular measurement
mm^2 = square millimeters
sq. in = square inch

Engineering Constants (continued)

Rotation/Rate

FPM = feet per minute
FPS = feet per second
m/s = meters per second
mph = miles per hour
cfm = cubic feet per minute

Mathematic

π = "pi"
rad. = radians
ρ = Density
E = Summation
Δ = Change

Pressure

kg. per sq. cm = kilograms per square centimeter
Hg = Mercury symbol
PSI = pounds per square inch
PSF = pounds per square foot

Volume

cu. = cubic
cu. in = cubic inch
cu. ft. = cubic feet
gal. = gallon
ml = milliliter
fl. oz. = fluid ounce (U.S.)

Conversion Factors

Length

To Convert:	To:	Multiply by:
Meters	Feet	3.281
Meters	Inches	39.37
Inches	Meters	.0254
Feet	Meters	.3048
Millimeters	Inches	.0394
Inches	Millimeters	25.4
Threads/Inch	Millimeter Pitch	Divide into 25.4
Yards	Meters	0.914

Example: 10 Meters X 3.281 = 32.81 Feet

Conversion Factors (continued)

Area

To Convert:	To:	Multiply by:
Circular mil	Meter ^{2}	0.50 X 10^{-9}
Yard^2	Meter^2	0.8361

Example: 10 Circular mils X 0.5 X 10^{-9} = 0.5 X 10^{-7} m^2
(0.5 X 10^{-7} Circular mils = .00000005 m^2)

Power

To Convert:	To:	Multiply by:
Watts	HP	.00134
ft-lb./min.	HP	.0000303
HP	kW	0.746

Example: 1500W X .00134 = 2.01 HP

Rotational/Rate

To Convert:	To:	Multiply by:
RPM	deg./sec.	6.00
RPM	Rad./sec.	0.1047
deg./sec.	RPM	0.1667
Rad./sec.	RPM	9.549
FPM	m/s	.00508
FPS	m/s	0.3048
gal./min.	cm^3/sec.	63.09
in./sec.	m/sec.	.0254
km/hr.	m/sec.	0.2778
mph	m/sec.	0.447
mph	km/hr.	1.609
yd.^{3}/min.	m^3/sec.	0.1274

Example: 1800 RPM X 6.00 = 10800 deg./sec.

Conversion Factors (continued)

Moment of Inertia

To Convert:	To:	Multiply by:
Newton-Meters^2	lb-ft.^{2}	2.42
oz-in^2	lb-ft.^{2}	.000434
lb-in^2	lb-ft.^{2}	.00694
Slug-ft^2	lb-ft.^{2}	32.17
oz-in-sec.^{2}	lb-ft.^{2}	0.1675
in-lb-sec.^{2}	lb-ft^2	2.68

Example: 25 Newton-Meters^2 X 2.42 = 60.5 lb-ft^2

Mass/Weight

To Convert:	To:	Multiply by:
oz.	g	31.1
kg	lbs.	2.205
lb .	kg	0.4536
Newtons	lbs.	0.2248

Example: 50 oz. X 31.1 = 1555 g

Torque

To Convert:	To:	Multiply by:
Newton-Meters	lb-ft	0.7376
lb-ft	Newton-Meters	1.3558
lb-in.	lb-ft	.0833
lb-ft	lb-in.	12.00

Example: 30 Newton-Meters X 0.7376 = 22.13 lb-ft.

Conversion Factors (continued)

Volume

To Convert:	To:	Multiply by:
cm^3 (ml)	m^3	.000001
fl.oz.	cm^3	29.57
$ft.^3$ of water (39.2°F)	kg (or liter)	28.32
cfm	m^3/sec.	.000472
liter	m^3	.001
$yd.^3$	m^3	0.7646

Example: 250 cm^3 X .000001 = .00025 m^3

Temperature

To Convert:	To:	Multiply by:
deg.F	deg.C	deg.C = $\frac{(\text{deg.F} - 32)}{1.8}$
deg.C	deg.F	deg.F = (deg.C X 1.8) + 32

Example: 20°C = (20 X 1.8) + 32 = 68°F

Fractional Inch to Equivalent Millimeters and Decimals

Inch	Equivalent			Inch	Equivalent	
	mm	Decimal			mm	Decimal
1/64	.3969	.0156		33/64	13.0969	.5156
1/32	.7938	.0313		17/32	13.4938	.5313
3/64	1.1906	.0469		35/64	13.8906	.5469
1/16	1.5875	.0625		9/16	14.2875	.5625
5/64	1.9844	.0781		37/64	14.6844	.5781
3/32	2.3813	.0938		19/32	15.0813	.5938
7/64	2.7781	.1094		39/64	15.4781	.6094
1/8	3.1750	.1250		5/8	15.8750	.6250
9/64	3.5719	.1406		41/64	16.2719	.6406
5/32	3.9688	.1563		21/32	16.6688	.6563
11/64	4.3656	.1719		43/64	17.0656	.6719
3/16	4.7625	.1875		11/16	17.4625	.6875
13/64	5.1594	.2031		45/64	17.8594	.7031
7/32	5.5563	.2188		23/32	18.2563	.7188
15/64	5.9531	.2344		47/64	18.6531	.7344
1/4	6.3500	.2500		3/4	19.0500	.7500
17/64	6.7469	.2656		49/64	19.4469	.7656
9/32	7.1438	.2813		25/32	19.8438	.7813
19/64	7.5406	.2969		51/64	20.2406	.7969
5/16	7.9375	.3125		13/16	20.6375	.8125
21/64	8.3344	.3181		53/64	21.0344	.8281
11/32	8.7313	.3438		27/32	21.4313	.8438
23/64	9.1281	.3594		55/64	21.8281	.8594
3/8	9.5250	.3750		7/8	22.2250	.8750
25/64	9.9299	.3906		57/64	22.6219	.8906
13/32	10.3188	.4063		29/32	23.0188	.9063
27/64	10.7156	.4219		59/64	23.4156	.9219
7/16	11.1125	.4375		15/16	23.8125	.9375
29/64	11.5094	.4531		61/64	24.2094	.9531
15/32	11.9063	.4688		31/32	24.6063	.9688
31/64	12.3031	.4844		63/64	25.0031	.9844
1/2	12.700	.5000		----	----	----

Inertia of a Solid Steel Shaft (lb-ft.^{2} - per inch of length)

Diameter (inches)	WK2		Diameter (inches)	WK2		Diameter (inches)	WK2
$\frac{3}{4}$	0.00006		8	0.791		$14\frac{1}{4}$	7.97
1	0.00007		$8\frac{1}{4}$	0.895		$14\frac{1}{2}$	8.54
$1\frac{1}{4}$	0.0005		$8\frac{1}{2}$	1.000		$14\frac{3}{4}$	9.15
$1\frac{1}{2}$	0.001		$8\frac{3}{4}$	1.130		15	9.75
$1\frac{3}{4}$	0.002		9	1.270		16	12.59
2	0.003		$9\frac{1}{4}$	1.410		17	16.04
$2\frac{1}{4}$	0.005		$9\frac{1}{2}$	1.550		18	20.16
$2\frac{1}{2}$	0.008		$9\frac{3}{4}$	1.750		19	25.03
$2\frac{3}{4}$	0.011		10	1.930		20	30.72
3	0.016		$10\frac{1}{4}$	2.130		21	37.35
$3\frac{1}{2}$	0.029		$10\frac{1}{2}$	2.350		22	44.99
$3\frac{3}{4}$	0.038		$10\frac{3}{4}$	2.580		23	53.74
4	0.049		11	2.830		24	63.71
$4\frac{1}{4}$	0.063		$11\frac{1}{4}$	3.090		25	75.02
$4\frac{1}{2}$	0.079		$11\frac{1}{2}$	3.380		26	87.76
5	0.120		$11\frac{3}{4}$	3.680		27	102.06
$5\frac{1}{2}$	0.177		12	4.000		28	118.04
6	0.250		$12\frac{1}{4}$	4.350		29	135.83
$6\frac{1}{4}$	0.296		$12\frac{1}{2}$	4.720		30	155.55
$6\frac{1}{2}$	0.345		$12\frac{3}{4}$	5.110		31	177.77
$6\frac{3}{4}$	0.402		13	5.58		32	201.80
7	0.464		$13\frac{1}{4}$	5.96		33	228.20
$7\frac{1}{4}$	0.535		$13\frac{1}{2}$	6.42		34	257.20
$7\frac{1}{2}$	0.611		$13\frac{3}{4}$	6.91		35	286.80
$7\frac{3}{4}$	0.699		14	7.42		36	323.20

Inertia of a Solid Steel Shaft (lb-ft.^{2} - per inch of length)

Diameter (inches)	WK2		Diameter (inches)	WK2		Diameter (inches)	WK2
37	360.70		62	2844.3		87	11028
38	401.30		63	3032.3		88	11544
39	445.30		64	3229.3		89	12077
40	492.78		65	3436.1		90	12629
41	543.90		66	3625.5		91	13200
42	598.80		67	3879.0		92	13790
43	658.10		68	4115.7		93	14399
44	721.40		69	4363.2		94	15029
45	789.30		70	4621.7		95	15679
46	861.80		71	4891.5		96	16349
47	939.30		72	5172		97	17041
48	1021.80		73	5466		98	17755
49	1109.60		74	5774		99	18490
50	1203.07		75	6090		100	19249
51	1302.2		76	6422		---	---
52	1407.4		77	6767		110	28183
53	1518.8		78	7125		120	39914
54	1636.7		79	7498		130	54978
55	1761.4		80	7885		140	73948
56	1893.1		81	8286		150	97449
57	2031.9		82	8703		160	126152
58	2178.3		83	9135		170	160772
59	2332.5		84	9584		180	202071
60	2494.7		85	10048		190	250858
61	2665.2		86	10529		200	307988

G Glossary

AC Contactor — An alternating-current (AC) contactor is designed for the specific purpose of establishing or interrupting an AC power circuit.

Adjustable Speed — The concept of varying the speed of a motor, either manually or automatically. The desired operating speed (set speed) is relatively constant regardless of load.

Adjustable Speed Drive (Electrical) — The adjustable speed drive is comprised of the motor, drive controller and operator's controls (either manual or automatic).

Ambient Temperature — Ambient temperature is the temperature of air, water, or a surrounding medium where equipment is operated or stored.

Armature — The rotating part of a DC motor.

Armature Control — Abbreviated term for *Armature voltage control* of a DC motor, which describes the usual method of changing the speed of a DC motor by controlling the magnitude of applied armature voltage.

Armature Current — Armature current is the DC current required by a DC motor to produce torque and drive a load. The maximum safe, continuous current is stamped on the motor nameplate. This can only be exceeded for initial acceleration, and for short periods of time. Armature current is proportional to the amount of torque being produced, therefore, it rises and falls as the torque demand rises and falls.

Armature Voltage Feedback — Armature voltage can be used as the speed feedback signal to an electronic speed regulator. This voltage is about directly proportional to motor speed, assuming a constant motor field and ignoring IR drop. Armature voltage feedback is used where the expense of a tachometer-generator for speed feedback is not justified and a regulation accuracy of 2-5% is adequate.

Axis — A principal direction along which movement of the tool or workpiece occurs. The term axis also refers to one of the reference lines of a coordinate system.

Back of a Motor — The back of a motor is the end which carries the coupling or driving pulley (NEMA). This is sometimes called the drive end (D.E.) or pulley end (P.E.).

Bandwidth — Generally, frequency range of system input over which the system will respond satisfactorily to a command.

Base Speed — Base speed is the manufacturer's nameplate rating where the motor will develop rated HP at rated load and voltage. With DC drives, it is commonly the point where full armature voltage is applied with full rated field excitation. With AC systems, it is commonly the point where 60 Hz is applied to the induction motor.

Bearing (Ball) — A "ball" shaped component that is used to reduce friction and wear while supporting rotating elements. For a motor, this type of bearing provides a relatively rigid support for the output shaft.

Bearing (Roller) — A special bearing system with cylindrical rollers capable of handling belted load applications, too large for standard ball bearings.

Braking

Braking provides a means of stopping an AC or DC motor and can be accomplished in several ways:

A. *Dynamic Braking (DC Drives)* - slows the motor by applying a resistive load across the armature leads after disconnection from the DC supply. This must be done while the motor field is energized. The motor then acts as a generator until the energy of the rotating armature is dissipated. This is not a holding brake.

Dynamic Braking (AC Drives) - Since AC motors do not have separate excitation, dynamic braking is accomplished by continuing to excite the motor from the drive. This causes a regenerative current to the drive's DC intermediated Bus Circuit. The Dynamic Brake resistors are then placed across the DC bus to dissipate the power returned. The brake resistor is usually switched by a transistor or other power switch controlled by the drive.

B. *Regenerative Braking* is similar to Dynamic Braking, but is accomplished electrically. The generated power is returned to the line through the power converter. It may also be just dissipated as losses in the converter (within its limitations).

C. *Motor Mounted or Separately Mounted Brake* is a positive action, mechanical, friction device. Normal configuration is such that when the power is removed, the brake is set. This can be used as a holding brake. (Note: A *Separately Mounted Brake* is not one which is located on some part of the mechanical drive train other than the motor.)

Breakaway Torque

The torque required to start a machine from standstill. It is always greater than the torque needed to maintain motion.

Breakdown Torque

The breakdown torque of an AC motor is the maximum torque which it will develop with rated voltage applied at rated frequency.

Bridge Rectifier

A full-wave rectifier that conducts current in only one direction of the input current. AC applied to the input results in approximate DC at the output.

Bridge Rectifier (Diode, SCR)

A diode bridge rectifier is a non-controlled full wave rectifier that produce constant rectified DC voltage. An SCR bridge rectifier is a full wave rectifier with an output that can be controlled by switching on the gate control element.

Brush

A brush is a conductor, usually composed of some element of carbon, serving to maintain an electrical connection between stationary and moving parts of a machine (commutator of a DC motor). The brush is mounted in a spring-loaded holder and positioned tangent to the commutator segments against which it "brushes". Pairs of brushes are equally spaced around the circumference of the commutator.

C.E.M.F.

Abbreviation for counter electromotive force, which is the product of a motor armature rotating in a magnetic field. This generating action takes place whenever a motor is rotating. Under stable motoring conditions the generated voltage (C.E.M.F.) is equal to the voltage supplied to the motor minus small losses. However, the polarity of the C.E.M.F. is opposite to that of the power being supplied to the armature.

"C" Face (Motor Mounting) This type of motor mounting is used to close couple pumps and similar applications where the mounting holes in the face are threaded to receive bolts from the pump. Normally "C" face is used where a pump or similar item is to be overhung on the motor. This type of mounting is a NEMA standard design and available with or without feet.

Closed Loop Closed loop refers to a regulator circuit in which the actual value of the controlled variable (e.g., speed) is sensed and a signal proportional to this value (feedback signal) is compared with a signal proportional to the desired value (reference signal). The difference between these signals (error signal) causes the actual value to change in the direction that will reduce the difference in signals to zero.

Cogging A condition in which a motor does not rotate smoothly but "steps" or "jerks" from one position to another during shaft revolution. Cogging is most pronounced at low motor speeds and can cause objectionable vibrations in the driven machine.

Commutation (inverter) The process by which forward current is interrupted or transferred from one switching device to the other. In most circuits where power is supplied from an AC source, turn-on control is adequate and turn-off occurs naturally when the AC cycle causes the polarity across a given device to reverse.

Commutation (DC Motor) Reversing the current in an armature coil when the coil (ends) moves from one side of the brush to the other side of the same brush. This completes the connection between the armature winding and the external circuit.

Commutator The commutator is a cylindrically shaped assembly that is fastened to the motor shaft and is considered part of the armature assembly. It consists of segments or "bars" that are electrically connected to two ends of one (or more) armature coils. Current flows from the power supply through the brushes, to the commutator and hence through the armature coils. The arrangement of commutator segments is such that the magnetic polarity of each coil changes a number of poles in the motor.

Comparator A device that compares one signal to another, usually the process signal compared to the set point or command signal.

Computerized Numerical Control (CNC) A numerical control system where a computer is used to perform some or all of the basic numerical control functions.

Constant Horsepower Range A range of motor operation where motor speed is controlled by field weakening in this range, motor torque decreases as speed increases. Since horsepower is speed times torque (divided by a constant), the value of horsepower developed by the motor in this range is constant.

Constant Torque Range A speed range in which the motor is capable of delivering a constant torque, subject to cooling limitations of the motor.

Constant Voltage Range (AC Drives) The range of motor operation where the drive's output voltage is held constant as output frequency is varied. This speed range produces motor performance similar to a DC drive's constant horsepower range.

Contact Reversing A method of reversing motor rotation by the use of two separate contactors, one of which produces rotation in one direction and the other produces rotation in the opposite direction. The contactors are electrically (and mechanically) interlocked so that both cannot be energized at the same time.

Continuous Duty (CONT) A motor that can continue to operate within the insulation temperature limits after is has reached normal operating (equilibrium) temperature.

Contouring An operation in which simultaneous control of more than one axis is accomplished.

Converter The process of changing AC to DC. This is accomplished through use of a diode rectifier or thyristor rectifier circuit. The term "converter" may also refer to the process of changing AC to DC to AC (e.g. adjustable frequency drive). A "frequency converter," such as that found in an adjustable frequency drive, consists of a *Rectifier*, a DC *Intermediate Circuit*, an *Inverter*, and a *Control Unit*.

Current Limiting An electronic method of limiting the maximum current available to the motor. This is adjustable so that the motor's maximum current can be controlled. It can also be preset as a protective device to protect both the motor and control from extended overloads.

Damping Damping is the reduction in amplitude of an oscillation in the system.

DC Contactor A contactor specifically designed to establish or interrupt a direct-current power circuit.

Definite-Purpose Motor A definite purpose motor is any motor design, listed and offered in standard ratings with standard operating characteristics from a mechanical construction for use under service conditions other than usual or for use on a particular type of application (NEMA).

Dead Band The range of values through which a system input can be changed without causing a corresponding change in system output.

Demagnetization (Current) When a permanent magnet DC motor is subjected to high current pulses, the magnets may become slightly demagnetized, resulting in a lower torque constant. Pulse currents of 7 to 10 times rated values can usually be applied without demagnetization.

Deviation Difference between an instantaneous value of a controlled variable and the desired value of the controlled variable corresponding to the set point. Also called error.

"D" Flange (Motor Mounting) This type of motor mounting is used when the motor is to be built as part of the machine. The mounting holes of the flange are not threaded. The bolts protrude through the flange from the motor side. Normally "D" flange motors are supplied without feet since the motor is mounted directly to the driven machine.

di/dt The rate of change in current versus a rate of change in time. Line reactors and isolation transformers can be used to provide the impedance necessary to reduce the harmful effects that unlimited current sources can have on phase controlled rectifiers (SCRs).

Diode A device that passes current in one direction, but blocks current in the reverse direction.

Drift Drive is the deviation from the initial set speed with no load change over a specific time period. Normally the drive must be operated for a specified warm-up time at a specified ambient temperature before drift specifications apply. Drift is normally caused by random changes in operating characteristics of various control components.

Drive Controller (Also called Variable Speed Drive.) An electronic device that can control the speed torque horsepower and direction of an AC or DC motor.

dv/dt The rate of change in voltage versus a rate of change in time. Specifically designed Resistor-Capacitor networks can help protect the SCRs from excessive dv/dt which can result from line voltage spikes, line disturbances and circuit configurations with extreme forward conducting or reverse blocking requirements.

Dwell The time spent in one state before moving to the next. In motion control applications for example, a dwell time may be programmed to allow time for a tool change or part clamping operation.

Dynamic Braking See *Braking*

Duty Cycle The relationship between the operating and rest times or repeatable operation at different loads.

Eddy Current Currents induced in motor components from the movement of magnetic fields. Eddy currents produce waste heat and are minimized by lamination of the of the motor poles and armature.

Efficiency Ratio of mechanical output to electrical input indicated by a percent. In motors, it is the effectiveness with which a motor converts electrical energy into mechanical energy.

EMF The initials of *electromotive force* which is another term for voltage or potential difference. In DC adjustable speed drives, voltage applied to the motor armature from a power supply is the EMF and the voltage generated by the motor is the counter-EMF or CEMF.

Enable To allow an action or acceptance of data by applying an appropriate signal to the appropriate input.

Enclosures Enclosure refers the housing in which the control is mounted. Enclosures are available in designs for various environmental conditions.

A. **NEMA TYPE 1** - A general purpose enclosure of either a ventilated or a non-ventilated variety. It is used for most indoor applications and is intended to protect against dust, light, indirect splashing and accidental human contact with the electrical circuit.

B. **NEMA TYPE 4** - A watertight enclosure is required whenever the unit is subjected to a great amount of water from any angle. It is normally used in areas that are repeatedly hosed down. These enclosures are not designed to be submerged.

C. **NEMA TYPE 7** - An enclosure designed for a hazardous location, Class 1 (air) Group D per the National Electrical Code. This hazardous environment is one in which flammable gases or vapors are or may be present in the air in quantities sufficient to produce explosive or ignitable mixtures. This enclosure shall be of such substantial construction that it will withstand the internal pressure resulting from explosions without bursting, permanently distorting or loosening its joints.

D. **NEMA TYPE 9** - An enclosure designed for a hazardous location, Class 2 Groups F and G per the National Electrical Code. The atmosphere in which this control must operate will contain carbon black, coal or coke dust, flour, starch, or grain dust.

E. **NEMA TYPE 12** - Designed for industrial use. The enclosure is intended for use in applications where it is desirable to exclude such materials as cooling oil, seepage, dust, lint, fibers and filings. This is normally a non-ventilated enclosure with an oil-resistant synthetic gasket between the case and the cover. The cover is hinged to swing horizontally and is held in place with suitable fasteners which require the use of a tool.

F. **JIC** - Joint Industry Conference enclosures are similar in specifications to the NEMA Type 4 and Type 12 enclosures. The most obvious difference is the way the seal is obtained. They are suitable for the abuse of the standard NEMA Type 4 and NEMA Type 12 enclosures.

G. **Hazardous Location** - Enclosures normally meet some or all of the following specifications: Class I, Group D; Class II, Groups E, F, and G; NEMA Type 7 and NEMA Type 9.

1. **Class I, Group D** - is designed to meet the application requirements of the NEC and is in accordance with the latest specifications of Underwriters Laboratories, Inc., for locations having atmospheres containing gasoline, hexane, naptha, benzine, butane, propane, alcohol, acetone, benzol, lacquer solvent vapors or natural gas.

2. **Class II, Group E, F, and G** - is designed to meet the application requirements of the NEC and is in accordance with the UL requirements for atmospheres containing metal dust, including: aluminum, magnesium, and their commercial alloys; and other metals of similar hazardous characteristics: carbon black, coal or coke dust, flour, starch, or grain dusts.

Encoder An electromechanical transducer that produces a serial or parallel digital indication of mechanical angle or displacement. Essentially an encoder provides high resolution feedback data related to shaft position and is used with other circuitry to indicate velocity and direction. The encoder produces discrete electrical pulses during each increment of shaft rotation.

Error Difference between the set point signal and the feedback signal. An error is necessary before a correction can be made in the controlled system.

Feedback The element of a control system that provides an actual operation signal for comparison with the set point to establish an error signal used by the regulator circuit.

Field The stationary electrical part of a DC motor.

Field Control Method of controlling DC motor speed by varying the field current in the shunt field windings.

Field Economy A circuit design feature of a DC motor shunt field supply that reduces the supply voltage output after a predetermined period of time. On many field supplies, this means a 50% reduction in output voltage 2 to 3 minutes after machine shutdown (idle). A field economy circuit serves to reduce standby power consumption and prolong the insulation life of the motor field windings.

Field Forcing Temporarily over-exciting a motor shunt field to overcome the L/R time constant, increase the rate of flux change and rapidly reverse the direction of shunt motor field current.

Field Range The range of motor speed from base speed to the maximum rated speed.

Field Reversing One method for producing regeneration. It is accomplished by changing the direction of current through the motor field, which reverses the polarity of the motor CEMF to account for generator action.

Field Weakening The action of reducing the current applied to a DC motor shunt field. This action weakens the strength of the magnetic field and thereby increases the motor speed.

Filter A device that passes a signal or a range of signals and eliminates all others.

Floating Ground A circuit whose electrical common point is not at earth ground potential or the same ground potential as circuitry it is associated with. A voltage difference can exist between the floating ground and earth ground.

Force The tendency to change the motion or position of an object with a push or pull. Force is measured in ounces or pounds.

Form Factor A figure of merit which indicates how much rectified current deviates from pure (non-pulsating) DC. A large departure from unity form factor (pure DC) increases the heating effect of the motor. Mathematically, it is expressed as I_{rms}/I_{av} (Motor heating current/Torque producing current).

Four-Quadrant Operation The four combinations of forward and reverse rotation and forward and reverse torque of which a regenerative drive is capable. The four combinations are:

1. Forward rotation/forward torque (motoring)
2. Forward rotation/reverse torque (regeneration)
3. Reverse rotation/reverse torque (motoring)
4. Reverse rotation/forward torque (regeneration)

Frame Size The physical size of a motor, usually consisting of NEMA designed "D" and "F" dimensions at a minimum. The "D" dimension is the distance in quarter inches from the center of the motor shaft to the bottom of the mounting feet. The "F" dimension relates to the distance between the centers of the mounting feet holes.

Front of a Motor The end opposite the coupling or driving pulley (NEMA). This is sometimes called the opposite pulley end (O.P.E.) or commutator end (C.E.).

Full-Load Torque The full-load torque of a motor is the torque necessary to produce rated horsepower at full-load speed.

Gate The control element of an SCR (silicon controlled rectifier) commonly referred to as a thyristor. When a small positive voltage is applied to the gate momentarily, the SCR will conduct current (when the anode is positive with respect to the cathode of the SCR). Current conduction will continue even after the gate signal is removed.

GTO Gate turn-off or gate turn-on power semiconductor device.

General-Purpose Motor This motor has a continuous Class "B" rating and design, listed and offered in standard ratings with standard operating characteristics and mechanical construction for use under unusual service conditions without restriction to a particular application or type of application (NEMA).

Head A measure of the amount of work that a motor can perform in a given period of time.

Horsepower A measure of the amount of work that a motor can perform in a given period of time.

Hunting Undesirable fluctuations in motor speed that can occur after a step change in speed reference (either acceleration or deceleration) or load.

Hysteresis Loss The resistance offered by materials to becoming magnetized results in energy being expended and corresponding loss. Hysteresis loss in a magnetic circuit is the energy expended to magnetize and demagnetize the core.

Induction Motor An alternating current motor in which the primary winding on one member (usually the stator) is connected to the power source. A secondary winding on the other member (usually the rotor) carries the induced current. There is no physical electrical connection to the secondary winding, its current is induced.

Inertia A measure of a body's resistance to changes in velocity, whether the body is at rest or moving at a constant velocity. The velocity can be either linear or rotational. The moment of inertia (WK^2) is the product of the weight (W) of an object and the square of the radius of gyration (K^2). The radius of gyration is a measure of how the mass of the object is distributed about the axis of ration. WK^2 is usually expressed in units of $lb\text{-}ft^2$.

Instability The state or property of a system where there is an output but no corresponding input.

Integral Horsepower Motor A motor built in a frame having a continuous rating of 1 HP or more.

Intermittent Duty (INT) A motor that never reaches equilibrium temperature (equilibrium), but is permitted to cool down between operations. For example, a crane, hoist or machine tool motor is often rated for 15 or 30 duty.

Inverter A term commonly used for an AC adjustable frequency drive. An inverter is also a term used to describe a particular section of an AC drive. This section uses the DC voltage from a previous circuit stage (Intermediate DC Circuit) to produce an AC current or voltage having the desired frequency.

IR Compensation — A way to compensate for the voltage drop across resistance of the AC or DC motor circuit and the resultant reduction in speed. This compensation also provides a way to improve the speed regulation characteristics of the motor, especially at low speeds. Drives that use a tachometer-generator for speed feedback generally do not require an IR Compensation circuit because the tachometer will inherently compensate for the loss in speed.

Isolation Transformer — A transformer that electrically separates the drive from the AC power line. An isolation transformer provides the following advantages:

1. In DC motor applications, it guards against inadvertent grounding of plant power lines through grounds in the DC motor armature circuit.
2. Enhances protection of semiconductors from line voltage transients.
3. Reduces disturbances from other solid state control equipment such as drives without isolation transformers, time clock systems, electronic counters, etc.

Jogging — Jogging is a means of accomplishing momentary motor movement by repetitive closure of a circuit using a single pushbutton or contact element.

Kinetic Energy — The energy of motion possessed by a body.

Linearity — A measure of how closely a characteristic follows a straight line function.

Linear Acceleration/ Deceleration — (LAD) A circuit that controls the rate at which the motor is allowed to accelerate to a set speed or decelerate to zero speed. On most drives, this circuit is adjustable and can be set to accommodate a particular application.

Locked-Rotor Current — Steady state current taken from the line with a rotor at standstill (at rated voltage and frequency). This is the current when starting the motor and load.

Locked-Rotor Torque — The minimum torque that a motor will develop at rest for all angular positions of the rotor (with rated voltage applied at rated frequency).

Megger Test — A test used to measure an insulation system's resistance. This is usually measured in megohms and tested by passing a high voltage at low current through the motor windings and measuring the resistance of the various insulation systems.

Multispeed Motor — An induction motor that can obtain two, three or four discrete (fixed) speeds by the selection of various stator winding configurations.

Negative Feedback — A condition where feedback is subtractive to the input reference signal. Negative feedback forms the basis for automatic control systems.

NEC — The National Electrical Code is recommendations of the National Fire Protection Association and is revised every three years. City or state regulations may differ from code regulations and take precedence over NEC rules.

NEMA — The National Electrical Manufacturers Association is a non-profit organization organized and supported by manufactures of electrical equipment and supplies. Some of the standards NEMA specifies are: HP ratings, speeds, frame sizes and dimensions, torques and enclosures.

Offset — The steady state deviation of a controlled variable from a fixed setpoint.

Open Load A control system that lacks feedback.

OP Amp An *Operational Amplifier* is usually a high-gain DC amplifier that is designed to be used with external circuit elements.

Open Machine (Motors) A machine having ventilating openings which permit passage of external cooling air over and around the winds of the machine.

A. **Drip-proof Machine** - is an open type machine in which the ventilating openings are so constructed that successful operation is not interfered with when drops of liquid or solid particles strike or enter the enclosure at any angle from 1 to 15 degrees downward from vertical.

B. **Splashproof** - is an open machine in which the ventilating openings are so constructed that successful operation is not interfered with when drops of liquid or solid particles strike or enter the enclosure at any angle not greater than 100 degrees downward from vertical.

C. **Semiguarded** - is an open machine in which part of the ventilating openings in the machine, normally in the top half, are guarded as in the case of a "guarded machine" but the others are left open.

D. **Guarded Machine** - (NEMA Standard) is an open machine in which all openings giving direct access to live metal or rotating parts (except smooth rotating surfaces) are limited in size by the structural parts or by the screens, baffles, grills, expanded metal or other means to prevent accidental contact with hazardous parts. Openings giving direct access to such live or rotating parts shall not permit the passage of a cylindrical rod 0.75 inch in diameter.

F. **Open Externally Ventilated Machine** - is one which is ventilated by means of a separate motor driven blower mounted on the machine enclosure. This machine is sometimes known as a blower-ventilated or a force-ventilated machine.

G. **Open Pipe Ventilated Machine** - is basically an open machine except that openings for admission of ventilating air are so arranged that inlet ducts or pipes can be connected to them. Air may be circulated by means integral with the machine or by means external to the machine (separately forced ventilated).

H. **Weather-Protected Machine** - is an open enclosure divided into two types:

1. **Type 1** - enclosure have ventilating passages constructed to minimize the entrance of rain, snow, airborne particles and prevent passage of a 0.75 inch diameter cylindrical rod.

2. **Type 2** - enclosures provide additional protection through the design of their intake and exhaust ventilating passages. The passages are so arranged that wind and airborne particles blown into the machine can be discharged without entering directly into the electrical parts of the machine. Additional baffling is provided to minimize the possibility of moisture or dirt being carried inside the machine.

Operating/Service Deviation

A means of specifying the speed regulating performance of a drive controller generally in percent of base speed.

Operating Deviation - defines speed change due to load change and typically assumes:

1. A change from one steady state load value to another (not transient).
2. A 95% maximum load change.

Service Deviation - defines speed change due to changes in ambient conditions greater than these typical variations:

Condition	Change
AC Line Voltage	+10% -5%
AC Line Frequency	+3% -5%
Ambient Temperature	15°C (59°F)

Overload Capacity

The ability of the drive to withstand currents beyond the systems continuous rating. It is normally specified as a percentage of full load current for a specified time period. Overload capacity is defined by NEMA as 150% of rated full load current for one minute for *Standard Industrial DC Motors*.

Overshoot

The amount that a controlled variable exceeds desired value after a change of input.

Plugging

Plugging refers to a type of motor braking provided by reversing either line voltage polarity or phase sequence so that the motor develops a counter-torque which exerts a retarding force to brake the motor.

Position Transducer

An electronic device (e.g. encoder or resolver) that measures actual position and converts this measurement into a feedback signal convenient for transmission. This signal may then be used as a input to a programmable controller which controls the parameters of the positioning system.

Positive Feedback

Positive feedback is a condition where the feedback is added to the input signal.

Power

Work done per unit of time. Measured in horsepower or watts:
1 HP = 33,000 Ft-lb/min. = 746 watts.

Power Factor

A measurement of the time phase difference between the voltage and current in an AC circuit. It is represented by the cosine of the angle of this phase difference. Power factor is the ratio of Real Power (kW) to total kVA or the ratio of actual power (W) to apparent power (volt-amperes).

Preset Speed

Preset speed refers to one or more fixed speeds at which the drive will operate.

PC (Programmable Controller) Solid-state control logic for machines and processes where a sequence of operations can be changed easily with programming (software).

Pull-In Torque (Synchronous Motors) The maximum constant torque which a synchronous motor will accelerate into synchronism at rated voltage and frequency.

Pull-Out Torque (Synchronous Motors) The maximum running torque of a synchronous motor.

Pull-Up Torque The torque required to accelerate the load from standstill to full speed (where breakdown torque occurs), expressed in percent of running torque. It is the torque required not only to overcome friction, windage, and product loading but also to overcome the inertia of the machine. The torque required by a machine may not be constant after the machine has started to turn. This load type is characteristic of fans, centrifugal pumps and certain machine tools.

PWM A type of AC adjustable frequency drive that accomplishes frequency and voltage control at the output section (inverter) of the drive. The drive's output voltage is always a constant amplitude and by "chopping" (pulse width modulating) the average voltage is controlled.

Reactances Any force that opposes changes in current voltage. The inertia of electrons causes them to oppose sudden changes in current flow or voltage.

Rectifier A device that transforms alternating-current to direct-current.

Regeneration The characteristic of a motor to act as a generator when the CEMF is larger than the drive's applied voltage (DC drives) or when the rotor synchronous frequency is greater than the applied frequency (AC drives).

Regenerative Braking The technique of slowing or stopping a drive by regeneration. *Also see Braking.*

Regenerative Control A regenerative drive contains the inherent capability and/or power semiconductors to control the flow of power to and from the motor.

Regulation The ability of a control system to hold a speed once it has been set. Regulation is given in percentages of either base speed or set speed. Regulation is rated upon two separate sets of conditions:

A. *Load Regulation (speed regulation)* - is the percentage of speed change with a defined change in load, assuming all other parameters to be constant. Speed regulation values of 2% are possible in drives utilizing armature voltage feedback, while regulation of .01% is possible using digital regulator schemes.

B. *Line Regulation* - is the percentage of speed change with a given line voltage change, assuming all other parameters to be constant.

Resolution The smallest distinguishable increment into which a quantity can be devised (e.g. position or shaft speed). It is also the degree to which nearly equal values of a quantity can be discriminated. For encoders, it is the number of unique electrically identified positions occurring in 360 degrees of input shaft rotation.

Reversing Changing the direction of rotation of the motor armature or rotor. A DC motor is reversed by changing the polarity of the field or the armature, but not both. An AC motor is reversed by reversing the connections of one leg on the three phase power line or by reversing the leads on a single phase power line. The reversing function is performed in one of the following ways:

A. *(DC) Contactor Reversing* - is done by changing the phase rotation of an AC motor or the polarity of a DC motor armature with switching contactors. The contactors are operated by momentary push buttons, and/or limit switches to stop the motor and change directions. A zero speed (antiplugging) circuit is associated with this system to protect the motor and control.

B. *(DC) Field Reversing* - is accomplished by changing the DC polarity to the motor shunt field. This type of reversing can be accomplished with DC rated contactors or by means of an electronically controlled solid state field supply.

C. *(DC) Manual Reversing* - is the act of reversing the DC polarity to the motor armature by changing the position of a single switch. The switch is usually detented to give a degree of mechanical antiplugging protection. Limit switches and remote stations cannot be used with this system. Dynamic braking is recommended.

D. *(AC or DC) Static Reversing* - is the act of reversing the DC polarity of the DC motor armature or phase rotation of an AC motor with no mechanical switching. This is accomplished electronically with solid state devices. Solid state antiplugging circuitry is generally a part of the design.

Service Deviation *See Operating/Service Deviation.*

Service Factor When used on a motor nameplate, a number which indicates how much above the nameplate rating a motor can be loaded without causing serious degradation (i.e. A motor with 1.15 S-F can produce 15% greater torque than one with 1.0 S-F.) to adjust measured loads in an attempt to compensate for conditions which are difficult to measure or define.

Set Speed The desired operating speed.

Silicon Controlled Rectifier (SCR) A solid-state switch, sometimes referred to as a thyristor. The SCR has an anode, cathode and control element called the gate. The device provides controlled rectification since it can be turned on at will. The SCR can rapidly switch large currents at high voltages. They are small in size and low in weight.

Shock Load The load seen by a clutch, brake or motor in a system which transmits high peak loads. This type of load is present in crushers, separators, grinders, conveyors, winches and cranes.

Skew The arrangement of laminations on a rotor or armature to provide a slight angular pattern of their slots with respect to the shaft axis. This pattern helps to eliminate low speed cogging in an armature and minimize induced vibration in a rotor as well as reduce associated noise.

Skewing Refers to time delay offset between any two signals in relation to each other.

Slewing Slewing is an incremental motion of the motor shaft or machine table from one position to another at maximum speed without losing position control.

Slip The difference between rotating magnetic field speed (synchronous speed) and rotor speed of AC induction motors. Usually expressed as a percentage of synchronous speed.

Special-Purpose Motor A motor with special operating characteristics or special mechanical construction or both, designed for a particular application and not falling within the definition of a general purpose or definite purpose motor (NEMA).

Speed Range The speed minimum and maximum at which a motor must operate under constant or variable torque load conditions. A 50:1 speed range for a motor with top speed of 1800 RPM means the motor must operate as low as 36 RPM and still remain within regulation specification. Controllers are capable of wider controllable speed ranges than motors because there is no thermal limitation, only electrical. Controllable speed range of a motor is limited by the ability to deliver 100% torque below base speed without additional cooling.

Speed Regulation The numerical measure in percent, of how accurately the motor speed can be maintained. It is the percentage of change in speed between full load and no load. The ability of a drive to operate a motor at constant speed (under varying load), without "hunting" (alternately speeding up and slowing down). It is related to both the characteristics of the load being driven and electrical time constants in the drive regulator circuits.

Stiffness The ability of a device to resist deviation due to load change.

Surge Protection The process of absorbing and clipping voltage transients on an incoming AC line or control circuit. MOVs (Metal Oxide Varistors) and specially designed R-C networks are usually used to accomplish this.

Synchronous Speed The speed on an AC induction motor's rotating magnetic field. It is determined by the frequency applied to the stator and the number of magnetic poles present in each phase of the stator windings. Mathematically, it is expressed as :Sync Speed (RPM) = 120 x Applied Freq. (HZ)/Number of poles per phase.

Tachometer-Generator (Tach) A small generator normally used as a rotational speed sensing device. Tachometers are typically coupled with the shaft of DC or AC motors requiring close speed regulation. The tach feeds a signal to a controller which then adjusts the output voltage or frequency to the motor.

Thread Speed A fixed low speed, usually adjustable supplied to provide a convenient method for loading and threading machines. May also be called a preset speed.

Torque A turning force applied to a shaft, tending to cause rotation. Torque is normally measured in ounce-inches or pound-feet and is equal to the force applied, times the radius through which it acts.

Torque Constant (in-lbs.) This motor parameter provides a relationship between input current and output torque. For each ampere of current applied to the rotor, a fixed amount of torque will reset.

Torque Control A method of using current limit circuitry to regulate torque instead of speed.

Totally Enclosed Machine (Motor) A totally enclosed machine is one so enclosed as to prevent the free exchange of air between the inside and the outside of the case but not sufficiently enclosed to be termed airtight.

A. *Totally Enclosed Fan-Cooled* - is a totally enclosed machine equipped for exterior cooling by means of a fan or fans integral with the machine but external to the enclosing parts.

B. *Explosion Proof Machine* - is a totally enclosed machine whose enclosure is designed and constructed to withstand an explosion of a specified gas or vapor which may occur within it and to prevent the ignition of the specified gas or vapor surrounding the machine by sparks, flashes or explosions of the specified gas or vapor which may occur within the machine casing.

C. *Dust-Ignition-Proof Machine* - is a totally enclosed machine whose enclosure is designed and constructed in a manner which will exclude ignitable amounts of dust or amounts which might affect performance or rating, and which will not permit arcs, sparks or heat otherwise generated or liberated inside of the enclosure to cause ignition or exterior accumulations or atmospheric suspensions of a specific dust on or in the vicinity of the enclosure.

D. *Waterproof Machine* - is a totally enclosed machine so constructed that it will exclude water applied in the form of a stream from a hose, except that leakage may occur around the shaft provided it is prevented from entering the oil reservoir and provision is made for automatically draining the machine. The means for automatic draining may be a check valve or a tapped hole at the lowest part of the frame which will serve for application of a drain pipe.

E. *Totally Enclosed Water-Cooled Machine* - is a totally enclosed machine which is cooled by circulating water, the water or water conductors coming in direct contact with the machine parts.

F. *Totally Enclosed Water-Air-Cooled Machine* - is a totally enclosed machine which is cooled by circulating air which, in turn, is cooled by circulating water. It is provided with a water-cooled heat exchanger for cooling the internal air and a fan or fans, integral with the rotor shaft or separate, for circulating the internal air.

Totally Enclosed Machine (Motor)

G. *Totally Enclosed Fan-Cooled Guarded Machine* - is a totally enclosed fan-cooled machine in which all openings giving direct access to the fan are limited in size by the design of the structural parts or by screens, grills, expanded metal, etc., to prevent accidental contact with the fan. Such openings shall not permit the passage of a cylindrical rod 0.75 inch in diameter, and a probe shall not contact the blades, spokes or other irregular surfaces of the fan.

H. *Totally Enclosed Air-Over Machine* - is a totally enclosed machine intended for exterior cooling by a ventilating means external to the machine.

Transducer A device that converts one energy form to another (e.g. mechanical to electrical). Also, a device that when actuated by signals from one or more systems or media, can supply related signals to one or more other systems or media.

Transient A momentary deviation in an electrical or mechanical system.

Transistor A solid-state three-thermal device that allows amplification of signals and can be used for switching and control. The three terminals are called the emitter, base and collector.

Vector A quantity that has magnitude, direction and sense. This quantity is commonly represented by a directed line segment whose length represents the magnitude and whose orientation in space represents the direction.

VVI A type of AC adjustable frequency drive that controls the voltage and frequency to the motor to produce variable speed operation. The VVI type drive controls the voltage in a section other than the output section where frequency generation takes place. The frequency control is accomplished by an output bridge circuit which switches the variable voltage to the motor at the desired frequency.

Work A force moving an object over a distance. Measured in inch-ounces (in-oz.) or foot-pounds (ft-lbs.) . Work = force times distance.

X Axis The axis of motion that is always horizontal and parallel to the work holding surface.

Y Axis The axis of motion that is perpendicular to both the X and Z axes.

Z Axis The axis of motion that is always parallel to the principal spindle of the machine.

Important User Information

The examples and diagrams in this manual are included solely for illustrative purposes. Because of the many variables and requirements associated with any particular installation, Allen-Bradley Company cannot assume responsibility or liability for actual use based on the examples and diagrams. In no event will Allen-Bradley Company be responsible or liable for indirect or consequential damages resulting from the use or application of this equipment.

Reproduction of the contents of this manual, in whole or in part, without written permission of Allen-Bradley Company is prohibited.

For Smart Motor Controller technical support contact your Allen-Bradley representative. In the United States you may also call 1-800-765-SMCS (765-7627) for assistance during the hours of 8:00 AM to 12:00 noon and 1:00 PM to 4:30 PM (Central Time Zone) from Monday through Friday.

© 1992 Allen-Bradley Company

STC, SMC-2, *SMC PLUS, SMB and Accu-Stop are trademarks of Allen-Bradley Company*

ALLEN-BRADLEY
A ROCKWELL INTERNATIONAL COMPANY

A subsidiary of Rockwell International, one of the world's largest technology companies, Allen-Bradley meets today's automation challenges with over 85 years of practical plant floor experience. More than 12,000 employees throughout the world design, manufacture and apply a wide range of control and automation products and supporting services to help our customers continuously improve quality, productivity and time to market. These products and services not only control individual machines, but also integrate the manufacturing process while providing access to vital plant floor data that can be used to support decision-making throughout the enterprise.

With offices in major cities worldwide.

WORLD HEADQUARTERS
Allen-Bradley
1201 South Second Street
Milwaukee, WI 53204 USA
Tel: (1) 414 382-2000
Telex: 43 11 016
FAX: (1) 414 382-4444

EUROPE/MIDDLE EAST/ AFRICA HEADQUARTERS
Allen-Bradley Europe B.V.
Amsterdamseweg 15.
1422 AC Uithoorn
The Netherlands
Tel: (31)2975/43500
Telex: (844) 18042
FAX: (31)2975/60222

ASIA/PACIFIC HEADQUARTERS
Allen-Bradley (Hong Kong) Limited
Room 1006, Block B, Sea View Estate
2-8 Watson Road
Hong Kong
Tel: (852)/887-4788
Telex: (780) 64347
FAX: (852)/510-9436

CANADA HEADQUARTERS
Allen-Bradley Canada Limited
135 Dundas Street
Cambridge, Ontario N1R 5X1
Canada
Tel: (1) 519 623-1810
FAX: (1) 519 623-8930

LATIN AMERICA HEADQUARTERS
Allen-Bradley
1201 South Second Street
Milwaukee, WI 53204 USA
Tel: (1) 414 382-2000
Telex: 43 11 016
FAX: (1) 414 382-2400

Publication 150-909 - January, 1992
Supersedes Publication 150-909 Dated May, 1990
and Publication 150-910 Dated April, 1989

©1992 Allen-Bradley Company, Inc.